"APPROVED FOR RELEASE: 08/09/2001 CIA-RDP86-00513R002200210006-8

USSR UDC 519.214

ANORINA, L. A. and NAGAYEV, A. V.

"Integral Limit Theorem for Sums of Independent Two-Dimensional Random Vectors Allowing for Large Deviations in the Case When Kramer's Condition is Not Satisfied"

Tashkent, Sluchayn. protsessy i smezhn. vopr.--Sbornik (Random Processes and Related Problems -- Collection of Works), Part 2, 1971, "Fan", pp 2-11 (from Referativnyy Zhurnal -- Matematika, No 9, Sep 71, Abstract No 9V73, by V. Petrov)

Translation: Suppose A_α is a region bounded by the close contour $\alpha x(\varphi) = \{\alpha x_1(\varphi), \alpha x_2(\varphi)\}$; $\{\xi_n\}$ is a sequence of independent, identically distributed, random, two-dimensional vectors with mathematical expectations equal to zero and with finite second moments. It is assumed that the distribution

1/2

APPROVED FOR RELEASE: 08/09/2001 CIA-RDP86-00513R002200210006-8"

"APPROVED FOR RELEASE: 08/09/2001 CIA-RDP86-00513R002200210006-8

USSR

ANORINA, L. A. and NAGAYEV, A. V., Sluchayn. protsessy i smezhn. vopr.--Sbornik, Part 2, 1971, pp 2-11

ξ_1 is absolutely continuous with the density $p(x) = |x|^{-\beta}(1 + \varepsilon(x))$, where $\beta > 4$, $\varepsilon(x) \to 0$ as $|x| \to \infty$, $x = (x_1, x_2)$, $|x| = \sqrt{x_1^2 + x_2^2}$. If the contour A_1 has actually only a finite number of points in which $x_1'(\varphi) = x_2'(\varphi) = 0$ and if the point (0, 0) lies within the region A_1, then

$$P\left(\frac{1}{\sqrt{n}}(\xi_1 + \ldots + \xi_n) \bar{\in} A_\alpha\right) \sim nP(\xi_1 \bar{\in} A_\alpha)$$

as $n \to \infty$ and $\frac{\alpha}{\sqrt{n \log n}} \to \infty$.

2/2

APPROVED FOR RELEASE: 08/09/2001 CIA-RDP86-00513R002200210006-8"

"APPROVED FOR RELEASE: 08/09/2001 CIA-RDP86-00513R002200210006-8

USSR UDC: 519.214

ANORINA, L. A., NAGAYEV, A. V.

"An Integral Limit Theorem for Sums of Independent Two-Dimensional Random Vectors With Regard to Large Deviations in the Case Where Cramer's Condition is not Satisfied"

V sb. Sluchayn. protsessy i smezhn. vopr. Ch. 2 (Random Processes and Related Problems--collection of works. Part 2), Tashkent, "Fan", 1971, pp 3-11 (from RZh-Kibernetika, No 9, Sep 71, Abstract No 9V73)

Translation: Let A_1 be a region bounded by the closed contour $\alpha\gamma(\varphi) = (\alpha x_1(\varphi), \alpha x_2(\varphi))$, and let $\{\xi_n\}$ be a sequence of independent identically distributed two-dimensional vectors with mathematical expectations equal to zero and with finite second moments. It is assumed that the distribution of ξ_1 is absolutely continuous with density $p(x) = |x|^{-\beta}(1+\varepsilon(x))$, where $\beta > 4$, $\varepsilon(x) \to 0$ as $|x| \to \infty$, $x = (x_1, x_2)$, $|x| = \sqrt{x_1^2 + x_2^2}$. If the contour of A_1 has at most a finite number of points at which $x_1'(\varphi) = x_2'(\varphi) = 0$ and if the point (0,0) is inside region A_1, then

1/2

APPROVED FOR RELEASE: 08/09/2001 CIA-RDP86-00513R002200210006-8"

"APPROVED FOR RELEASE: 08/09/2001 CIA-RDP86-00513R002200210006-8

USSR

ANORINA, L. A., NAGAYEV, A. V., Sluchayn. protsessy i smezhn. vopr. Ch. 2, Tashkent, "Fan", 1971, pp 3-11

$$P\left(\frac{1}{\sqrt{n}}(\xi_1 + \dots + \xi_n)\bar{\in} A_\alpha\right) \sim nP(\xi_1 \bar{\in} A_\alpha)$$

when $n \to \infty$ and $\frac{\alpha}{\sqrt{n \log n}} \to \infty$. V. Petrov.

2/2

APPROVED FOR RELEASE: 08/09/2001 CIA-RDP86-00513R002200210006-8"

"APPROVED FOR RELEASE: 08/09/2001 CIA-RDP86-00513R002200210006-8

USSR

ANOROV, V. F.

"One Form of Equations of Motion of a Flight Vehicle"

Tr. Pyatykh Chteniy, Prosvyashch. Pazrabotke Nauch. Nasledlya i Razvitiy Idey. K. E. Tsiolkovskogo, 1970. Sekts. Mekh Kosmich, Poleta, [Works of Fifth Readings Dedicated to Development of the Scientific Heritage and Ideas of K. E. Tsiolkovskiy, 1970, Section on "Space Flight Mechanics"], Moscow, 1971, pp 88-94. (Translated from Referativnyy Zhurnal Mekhanika, No 1, 1972, Abstract No. 1B369 by V. I. Kholyavko).

Translation: The equations of motion of a spacecraft in the atmosphere are described in a velocity system of coordinates; the rotation of the vehicle around its center of mass is described using the same angles of orientation of the spacecraft as are used for determination of the aerodynamic forces and moments acting on it (angles of attack, bank and slip). This reduces the number of computation operations (in the three final equations) and correspondingly reduces machine time required for calculation.

1/1

APPROVED FOR RELEASE: 08/09/2001 CIA-RDP86-00513R002200210006-8"

"APPROVED FOR RELEASE: 08/09/2001 CIA-RDP86-00513R002200210006-8

1/2 024 UNCLASSIFIED PROCESSING DATE--20NOV70

TITLE--TIME OPTIMAL FLAT TURN OF SOLID BODY -U-

AUTHOR-(02)-ANDROV, V.P., KUROVIN, V.N.

COUNTRY OF INFO--USSR

SOURCE--AVTOMATIKA I TELEMEKHANIKA, 1970, NR 4, PP 14-25

DATE PUBLISHED--------70

SUBJECT AREAS--PHYSICS

TOPIC TAGS--TIME OPTIMAL CONTROL, SOLID DYNAMICS, FREE PATH, VECTOR, VECTOR ANALYSIS, MATHEMATIC ANALYSIS

CONTROL MARKING--NO RESTRICTIONS

DOCUMENT CLASS--UNCLASSIFIED

PROXY REEL/FRAME--1998/0594 STEP NO--UR/0103/70/000/004/0014/0025

CIRC ACCESSION NO--AP0121263

UNCLASSIFIED

APPROVED FOR RELEASE: 08/09/2001 CIA-RDP86-00513R002200210006-8"

"APPROVED FOR RELEASE: 08/09/2001 CIA-RDP86-00513R002200210006-8

2/2 024 UNCLASSIFIED PROCESSING DATE--20NOV70

CIRC ACCESSION NO--AP0121263

ABSTRACT/EXTRACT--(U) GP-0- ABSTRACT. THERE IS INVESTIGATED THE PROBLEM OF THE OPTIMAL BY QUICK RESPONSE TURN OF AN ARBITARY FREE SOLID BODY RELATIVE TO ITS ARBITRARY MOTIONLESS AXIS. IT IS ASSUMED THAT THE PROJECTIONS OF THE VECTOR OF THE CONTROLLING MOMENTUM ON THE MAIN AXES OF THE INERTIA OF A ROTATING BODY ARE RESTRICTED IN VALUE, BUT THE ANGLE VELOCITY BOTH AT THE BEGINNING AND AT THE END OF THE TURN TO THE SET ANGLE IS EQUAL TO ZERO. OPTIMAL CONTROL IS SYNTHESIZED. A NUMERIC EXAMPLE IS GIVEN.

UNCLASSIFIED

APPROVED FOR RELEASE: 08/09/2001 CIA-RDP86-00513R002200210006-8"

"APPROVED FOR RELEASE: 08/09/2001 CIA-RDP86-00513R002200210006-8

1/3 013 UNCLASSIFIED PROCESSING DATE--27NOV70

TITLE--CHLORINATION OF O,CARBORANYLMAGNESIUM BROMIDES AND DETERMINATION OF THE STRUCTURE OF C,B,DICHLORO,O,CARBORANES -U-

AUTHOR-(02)-STANKO, V.I., ANDROVA, G.A.

COUNTRY OF INFO--USSR

SOURCE--ZH. OBSHCH. KHIM. 1970, 40(3), 646-51

DATE PUBLISHED--------70

SUBJECT AREAS--CHEMISTRY

TOPIC TAGS--CHLORINATED ORGANIC COMPOUND, CARBORANE, MAGNESIUM COMPOUND, GRIGNARD REAGENT, BROMINATED ORGANIC COMPOUND, ORGANOLITHIUM COMPOUND

CONTROL MARKING--NO RESTRICTIONS

DOCUMENT CLASS--UNCLASSIFIED

PROXY REEL/FRAME--3006/1476 STEP NO--UR/0079/70/040/003/0646/0651

CIRC ACCESSION NO--AP0136144

UNCLASSIFIED

APPROVED FOR RELEASE: 08/09/2001 CIA-RDP86-00513R002200210006-8"

"APPROVED FOR RELEASE: 08/09/2001 CIA-RDP86-00513R002200210006-8

2/3 013 UNCLASSIFIED PROCESSING DATE--27NOV70

CIRC ACCESSION NO--AP0135144

ABSTRACT/EXTRACT--(U) GP-0- ABSTRACT. THE GRIGNARD REAGENT FROM 0.03 MOLE 12,CHLORO,O,CARBORANE AND ETMGBR IN TETRAHYDROFURAN (THF) WAS ADDED TO 0-5DEGREES TO CCL SUB4-C SUB6 H SUB6 AND KEPT 0.5 HR, THEN AT 0DEGREES 15 MIN, TO YIELD 11PERCENT 1,4,(5),12,TRICHLORO,O,CARBORANE, M. 145-9DEGREES, AND 15PERCENT 1,7(8),12 ISOMER, M. 127-9DEGREES; CHLORINATION, WITH CL, OF 12,CHLORO,P,CARBORANE GAVE THE SAME PRODUCTS IN SIMILAR YIELDS. 1,CHLORO,O,CARBORANE IN CCL SUB4 TREATED WITH CL 1 HR GAVE 1:3 MIXT. OF 1,10,DICHLORO,O,CARBORANE, M. 165-7DEGREES, AND 1,12 ISOMER, M. 152-4DEGREES. 1,BROMO,O,CARBORANE AND CL,CCL SUB4,ALCL SUB3 GAVE 15PERCENT 1,BROMO,10,CHLORO,O,CARBORANE,M. 164-5DEGREES AND 12PERCENT 1,BROMO,12,CHLORO ISOMER, M. 126-9DEGREES; BROMINATION OF THE GRIGNARD REAGENT GAVE SIMILAR RESULTS. BULI AND 1,METHYL,10 AND 12,CHLORO,O,CARBORANE MIXT. IN ET SUB2 O ADDED TO CCL SUB4 AND TREATED WITH 1 MOLE CL GAVE 39PERCENT MIXED ISOMERS, SEPD. CHROMATOGRAPHICALLY INTO 19PERCENT 1,METHYL,2,10,DICHLORO,O,CARBORANE, M. 175-6DEGREES, AND 16PERCENT 2,12 DICHLORO ANALOG, M. 149-50DEGREES.
1,METHYL,2,CHLORO,O,CARBORANE IN CCL SUB4 REFLUXED WITH CL 24 HR GAVE A LOW YIELD OF 1,METHYL,2,9,10,11,12,PENTACHLORO,O,CARBORANE, M. 236-8DEGREES, ALSO PREPD. FROM
1,METHYL,9,10,11,12,TETRACHLORO,O,CARBORANE AND BULI IN ET SUB2 O ADDED TO CCL SUB4. GRIGNARD REAGENT FROM BROMO, METHYL,O,CARBORANE AND MG IN THF WAS TREATED WITH 1 MOLE ETMGBR, HEATED 15 MIN AND ADDED TO 1 MOLE CLIN C SUB6 H SUB6 AT 5DEGREES TO YIELD A MIXT. OF 8PERCENT 1,METHYL,2,CHLORO,O,CARBORANE, 43PERCENT 1,
METHYL,2,B,DICHLORO,O,CARBORANE (I) M. 220-2DEGREES, AND 49PERCENT

UNCLASSIFIED

APPROVED FOR RELEASE: 08/09/2001 CIA-RDP86-00513R002200210006-8"

"APPROVED FOR RELEASE: 08/09/2001 CIA-RDP86-00513R002200210006-8

3/3 013 UNCLASSIFIED PROCESSING DATE--27NOV70

CIRC ACCESSION NO--AP0135144

ABSTRACT/EXTRACT--ETMGBR ADDED TO 0.5 MOLE 1,METHYL,2,CHLORO,O,CARBORANE, HEATED 15 MIN AND TREATED WITH 2 MOLES CL IN C SUB6 H SUB6 AT 5-70DEGREES GAVE 8PERCENT 1,METHYL,2,CHLORO,O,CARBORANE, 68PERCENT I, AND 24PERCENT METHYL,O,CARBORANE.

UNCLASSIFIED

APPROVED FOR RELEASE: 08/09/2001 CIA-RDP86-00513R002200210006-8"

"APPROVED FOR RELEASE: 08/09/2001 CIA-RDP86-00513R002200210006-8

USSR UDC: 620.197.3

ANOSHCHENKO, I. P., SORCHENKO, A. P., and LUK'YANOVA, G. I., Novocherkassk Polytechnic Institute

"Effect of Antimony Trichloride on the Corrosion Behavior of Titanium in Sulfuric and Hydrochloric Acids"

Moscow, Zashchita Metallov, Vol. 6, no. 4, [illegible]

Abstract: Earlier research shows that the dissolution rate of titanium in 2 n. solution of HCl sharply decreases in the presence of triply charged cations. This study involves their effect on the behavior of VT1-0 titanium in chemically pure 5 n. sulfuric and hydrochloric acids. Parallel tests (by gravimetry) were conducted on 3 specimens for each acid at 80°C. The duration of the experiment was 3 hours. Polarization measurements were made in open air in a cell with separated electrode spaces. A table in the original article shows that with a deficient content of $SbCl_3$, the dissolution rate increases, apparently due to the cathodic reaction $Sb^{3+}+3e \rightarrow Sb$, $E_0=+0.20v$ or $SbO^{+}+2H^{+}+3e \rightarrow Sb+H_2O$; $E_0=+0.212$ v. Passivation sets in above the "critical"

1/2

APPROVED FOR RELEASE: 08/09/2001 CIA-RDP86-00513R002200210006-8"

"APPROVED FOR RELEASE: 08/09/2001 CIA-RDP86-00513R002200210006-8

USSR

ANOSHCHENKO, I. P., et al, Zashchita Metallov, Vol. 6, no. 4, Jul-Aug 70, pp 443-444

concentration and the corrosion rate sharply drops. With cathodic polarization, metallic antimony separates and appears on the surface of titanium. In the presence of $SbCl_3$ the anodic polarization curve lies completely within the passive state region. The corrosion resistance of VTI titanium, which equals zero in sulfuric and hydrochloric acid solutions at various temperatures, rises sharply in the presence of sufficient amounts of triply positively charged Sb cations, while the below-critical concentration the corrosion rate increases.

2/2

APPROVED FOR RELEASE: 08/09/2001 CIA-RDP86-00513R002200210006-8"

"APPROVED FOR RELEASE: 08/09/2001 CIA-RDP86-00513R002200210006-8

1/2 017 UNCLASSIFIED PROCESSING DATE--30OCT70

TITLE--CLINICO LABORATORY PECULIARITIES OF CURRENT DYSENTERY ACCORDING TO MATERIALS OF KRASNODAR SECOND CITY HOSPITAL -U-

AUTHOR-(05)-KLOKOVA, G.F., PODVARKO, A.G., TSYS, N.S., ANOSHINA, L.I., GUNCHAROVA, YE.I.

COUNTRY OF INFO--USSR

SOURCE--ZHURNAL MIKROBIOLOGII, EPIDEMIOLOGII I IMMUNOBIOLOGII, 1970, NR 6, PP 37-40

DATE PUBLISHED--------70

SUBJECT AREAS--BIOLOGICAL AND MEDICAL SCIENCES

TOPIC TAGS--DYSENTERY, ANTIBIOTIC RESISTANCE, STREPTOMYCIN, CHLORAMPHENICOL/(U)BIOMYCIN ANTIBIOTIC

CONTROL MARKING--NO RESTRICTIONS

DOCUMENT CLASS--UNCLASSIFIED

PROXY REEL/FRAME--3001/0833 STEP NO--UR/0016/70/000/006/0037/0040

CIRC ACCESSION NO--AP0126510

UNCLASSIFIED

APPROVED FOR RELEASE: 08/09/2001 CIA-RDP86-00513R002200210006-8"

"APPROVED FOR RELEASE: 08/09/2001 CIA-RDP86-00513R002200210006-8

2/2 017 UNCLASSIFIED PROCESSING DATE--30OCT70

CIRC ACCESSION NO--AP0126510

ABSTRACT/EXTRACT--(U) GP-0- ABSTRACT. A STUDY WAS MADE OF 258 CASE HISTORIES OF PATIENTS SUFFERING FROM DYSENTERY WITH BACTERIOLOGICALLY CONFIRMED DIAGNOSIS; CLINICO LABORATORY INDICES OF THE DISEASE WERE COMPARED IN 1957 (122 PATIENTS) AND IN 1967 (136 PATIENTS). A PREVALENCE OF SONNE DYSENTERY IN 1967 WAS NOTED (80PERCENT); IT DIFFERED FROM FLEXNER DYSENTERY BY A MILDER COURSE, AN INCREASE IN THE NUMBER OF ATYPICAL, LATENT FORMS AND OF FORME FRUSTE, AND ALSO BY A LESSER INCIDENCE OF THE CHANGE TO CHRONIC FORM. IT APPEARED THAT 59.5PERCENT OF ALL THE SONNE STRAINS WERE RESISTANT TO CHLORAMPHENICOL, BIOMYCIN AND STREPTOMYCIN. FACILITY: KUBANSKIY MEDITSINSKIY INSTITUT IM. KRASNOY ARMII I GORODSKAYA BOL'NITSA NR 2, KRASNODAR.

UNCLASSIFIED

APPROVED FOR RELEASE: 08/09/2001 CIA-RDP86-00513R002200210006-8"

"APPROVED FOR RELEASE: 08/09/2001 CIA-RDP86-00513R002200210006-8

METALLURGY AND MINERALS

Source: CDRS-6126
13 Feb 74

DETERMINATION OF PRESENCE OF GOLD IN BASIC AND ACIDIC ROCK FORMATIONS IN URALS

[illegible] of the Institute of Geology and Geochemistry of the Ural Scientific Center of the Academy of Sciences, USSR, Sverdlovsk; Moscow, Sovetskaya Geologiya, Izvestiya [illegible], Russian, No [illegible], submitted to editors 27 October 1973, by [illegible]

From the many ore regions, the Urals are known as the richest [illegible] province of the USSR, where native and placer deposits of gold are related to the acid intrusive and basic effusive formations. Moreover, since the past century the permanent presence of gold in placer deposits of native platinoids, genetically related to massifs of ultrabasic rock, developed very extensively in the Urals, has been known.

In connection with the little studied geochemistry of gold in ultrabasic and basic rocks and the great amount of interest which they have for the geochemistry of deep mantle formations, materials of original mineralogical and petrological investigations of the most important basic and acidic formations of the zone of the Main Urals Fracture were presented as the object of investigation.

The Geological and Petrological Features of the Objects of Investigation

The Urals petrographic province is a classical zone of development of ultrabasic and basic rock, which form a number of lively and acidic intrusive formations. Of greatest interest to understand the material composition of the deep zones of the Urals geosyncline are the extensively studied basic and acidic formations.

The rock massifs contained in these formations are native to the zone of the Main Urals Fracture of deep crinkling, which separates the ancient metamorphic zone of the Ural-Tau from the zone of development of large sedimentary effusive greenstone strata of the Tagil-Magnitogorsk synclinorit.

APPROVED FOR RELEASE: 08/09/2001 CIA-RDP86-00513R002200210006-8"

"APPROVED FOR RELEASE: 08/09/2001 CIA-RDP86-00513R002200210006-8

We are conducting a wide search for [illegible] methods of wages and material stimulation, and just a list of the experiments which are being conducted would fill an entire newspaper page.

A number of ministries -- above all, of the electrical engineering, instrument making, motor vehicle, electronics, and chemical industries and on hire building -- are studying and encouraging [illegible] experience. However, certain ministries and departments prevent [illegible]. Instead of improving the methods of stimulating production and increasing the effectiveness of science, they seek to get a maximal increase in wages by means of the establishment of all kinds of coefficients, assigning enterprises, institutes, and organizations to higher wage categories, and so forth. What can be said about this? You cannot manage a branch without managing labor. And to improve stimulation without first conducting experiments is also impossible because stimuli have to pass through a person's consciousness and abstract calculations alone can in practice prove to be ineffective.

A study and generalization of the results of the experiments will provide important material for a further improvement of the systems of stimulation which are in keeping with the demands of the current stage of our socialist economy. Perhaps in 1974 Literaturnaya Gazeta will describe the most interesting experiments in the field of stimulating labor. Can we hope for that?

Question: Indeed!... Thank you for the interview about our readers' letters.

2959
CSO: 1822-W

APPROVED FOR RELEASE: 08/09/2001 CIA-RDP86-00513R002200210006-8"

"APPROVED FOR RELEASE: 08/09/2001 CIA-RDP86-00513R002200210006-8

USSR

UDC 547.26'118 + 543.226

PUDOVIK, A. N., KONOVALOVA, I. V., ANOSHINA, N. P., and ROMANOV, G. V., Institute of Organic and Physical Chemistry imeni A. Ye. Arbuzov, Academy of Sciences USSR and Kazan' State University imeni Ul'yanov-Lenin

"Determination of the Activation Energy of the Phosphonate-Phosphate Rearrangement and of Some Other Reactions by the Method of Differential-Thermal Analysis"

Leningrad, Zhurnal Obshchey Khimii, Vol 43 (105), No 10, Oct 73, pp 2153-2156

Abstract: Determination of the activation energy of the decomposition of sodium bicarbonate, isomerization of the ethylphosphonous acid diallyl ester, phosphonate-phosphate rearrangement, and the breakdown of α-hydroxyalkylphosphonates and their analogs was carried out by means of the differential thermal analysis (DTA). A satisfactory agreement has been achieved between the calculated and literature data. It has been shown that DTA may be used in determining E_{act} for thermal reactions of α-hydroxyalkylphosphonates.

1/1

APPROVED FOR RELEASE: 08/09/2001 CIA-RDP86-00513R002200210006-8"

"APPROVED FOR RELEASE: 08/09/2001 CIA-RDP86-00513R002200210006-8

USSR UDC 547.341'139.81+547.391

PUDOVIK, A. N., BATYEVA, E. S., NESTERENKO, V. D., and ANOSHINA, N. P.

"Reaction of Analides of Dialkyl Phosphorous and Diaryl Phosphonous Acids with p-Qyinones"

Leningrad, Zhurnal Obshcoy Khimii, Vol XLIII (CV), No 1, 1973, pp 32-37

Abstract: In continuation of the study of the reactions of acid amides of trivalent phosphorous with compounds containing an activated carbonyl group [A. N. Pudovik, et al., Izv. AN SSSR, Ser. Khim., 510, 1972], a study was made of the reactions of analides of dialkyl phosphorous and diaryl phosphonous acids with different substituted and unsubstituted p-quinones and p-naphthoquinone. The amides of dialkylphosphorous and diaryl phosphonous acids react with p-quinones with the formation of 0,0-dialkyl-0- p-hydroxy aryl- p-arylinido phosphates and phosphinates. The 0,0-dialkyl-0- p-hydroxyaryl-N-arylinido phosphates are subjected to thermal regrouping into 0-alkyl-0- p-alkoxyaryl-N-arylamido phosphates.

1/1

APPROVED FOR RELEASE: 08/09/2001 CIA-RDP86-00513R002200210006-8"

"APPROVED FOR RELEASE: 08/09/2001 CIA-RDP86-00513R002200210006-8

USSR

UDC 542.91+541.6:547.1'118

ANOSHINA, N. P., GOL'DFARB, E. I., VOSKRESENSKAYA, O. V., KIRPICHNIKOV, P. A., and MUKMENEV, E. T., Institute of Organic and Physical Chemistry imeni A. Ye. Arbuzov, Academy of Sciences USSR, and Kazan' Institute of Chemical Technology imeni S. M. Kirov

"Use of the Arbuzov Reaction to Establish the Structure of Tricyclic D-Mannitol Triethyl Triphosphite"

Moscow, Izvestiya Akademii Nauk SSSR, Seriya Khimicheskaya, No 6, Jun 72, pp 1390-1395

Abstract: The authors used the Arbuzov reaction to establish the ring size in tricyclic D-mannitol triethyl triphosphite. A study was made of the reaction with ethyl bromide of tricyclic triethyl triphosphite and phosphites which model it, obtained from 1,2; 5,6-di- and 3,4-O-isopropylidene-, as well as 1,3; 4,6-di- and 2,5-O-methylene-D-mannitols. Differential thermal analysis and ^{31}P-NMR data indicate that tricyclic D-mannitol triethyl triphosphite represents 2-ethoxy-4,5-bis-(2'-ethoxy-1',3',2'-dioxaphospholanyl-4')-1,3,2-dioxaphospholane.

1/1

APPROVED FOR RELEASE: 08/09/2001 CIA-RDP86-00513R002200210006-8"

"APPROVED FOR RELEASE: 08/09/2001 CIA-RDP86-00513R002200210006-8

USSR

UDC 542.91:547.1'118

PUDOVIK, A. N., DMITRIYEVA, G. V., [redacted], ZYABLIKOVA, T. A., and KHAYRULLIN, V. K., Institute of Organic and Physical Chemistry imeni A. Ye. Arbuzov, Academy of Sciences USSR

"Reaction of Chlorophosphines with β-Chloroacrylic Acid"

Moscow, Izvestiya Akademii Nauk SSSR, Seriya Khimicheskaya, No 5, May 72, pp 1159-1164

Abstract: The article describes the reaction of methyl-, ethyl-, and phenyldichlorophosphine with β-chloroacrylic acids, as well as results of thermographic studies of some reactions of this type. The reaction of methyl-, ethyl- and phenyldichlorophosphine with cis-β-chloroacrylic acid gives alkyl- or aryl-(β-chloroformylvinyl)phosphinic acid chlorides, while the reaction with trans-β-chloroacrylic acid gives trans-β-chloroacrylic acid chloride.

1/1

APPROVED FOR RELEASE: 08/09/2001 CIA-RDP86-00513R002200210006-8"

"APPROVED FOR RELEASE: 08/09/2001 CIA-RDP86-00513R002200210006-8

UDC 547.241+547.391.1

USSR

GAZIZOV, T. Kh., VASYANINA, M. A., PASHINKIN, A. P., ANOSHINA, N. P., GOL'DFARB, Z. I., and PUDOVIK, A. N., Institute of Organic and Physical Chemistry imeni A. Ye. Arbuzov, Academy of Sciences USSR

"Mechanism of the Reaction of Diethyl Chlorophosphite With Acrylic Acid"

Leningrad, Zhurnal Obshchey Khimii, Sep 71, Vol 41, No 9, pp 1957-1961

Abstract: The study of the reaction of diethyl chlorophosphite with acrylic acid using P^{31} NMR and thermography gives rise to the conclusion that protonation of the phosphorus atom either completely initiates or predominates in the reaction which is followed by the addition of diethylphosphorus acid (an intermediate product formed in the early stage of the reaction) to the acrylic acid chloride. The experimental portion of the paper covers in detail the reactions of diethyl chlorophosphite with acrylic acid, diethyl acroyl phosphite with hydrogen chloride and diethylphosphorous acid with acrylic acid chloride.

1/1

APPROVED FOR RELEASE: 08/09/2001 CIA-RDP86-00513R002200210006-8"

"APPROVED FOR RELEASE: 08/09/2001 CIA-RDP86-00513R002200210006-8

UDC 621.385.032.213:621.385.032.11--621.52

USSR

SHTROMBERGER, L.V., ANOSHKIN, A.V.

"Use Of Mixed Scheme Of Evacuation During Processing Of Oxide Cathodes"

Elektron. tekhnika. Nauchno-tekhn. sb. Elektron SVCh (Electronic Technology. Scientific-Technical Collection. Microwave Electronics), 1970, Issue No 10, pp 144-148 (from RZh--Elektronika i yeye primeneniye, No 2, February 1971, Abstract No 2A116)

Translation: A method is presented for evacuation of electrovacuum devices by a mixed scheme combining oil and non-oil evacuation. At the first station (removal of gases confined in the free space of the device, gases released during warmup of the system, and gases released during burning out of the binder and decomposition of carbonates) evacuation is conducted by oil-vapor diffusion pumps through a trap which is cooled by liquid nitrogen. With a decrease of gas separation (after decomposition of the carbonates) evacuation continues with a magnetic electrodischarge pump, and the oil-vapor pump with the trap are separated from the system by a lock. A negligible gas separation at the terminal stages of processing the cathode makes it possible to employ electrodischarge

1/2

APPROVED FOR RELEASE: 08/09/2001 CIA-RDP86-00513R002200210006-8"

"APPROVED FOR RELEASE: 08/09/2001 CIA-RDP86-00513R002200210006-8

USSR

SHTROMBERGER, L. V., et al, Elektron. tekhnika. Nauchno-tekhn. sb. Elektron SVCh, 1970, Issue No 10, pp 144-148

pumps of low performance. The entire cycle of evacuation from the start-up of an oil-vapor diffusion pump to the establishment of a normal regime of current takeoff [tokootbor] from the cathode is continued for 36 hours. The method of evacuation presented makes it possible to reduce the time for processing the device at the evacuation station, to give up the use of small units, and to maintain a preference for non-oil evacuation. 4 ill. 3 ref. G.B.

2/2

APPROVED FOR RELEASE: 08/09/2001 CIA-RDP86-00513R002200210006-8"

"APPROVED FOR RELEASE: 08/09/2001 CIA-RDP86-00513R002200210006-8

ACC NR: AP7016871 SOURCE CODE: UR/0413/67/000/008/0084/0084

INVENTOR: Khodkin, V. I.; Khazanova, T. P.; Karsanov, G. V.; Tirkina, A. N.; Gerasimova, M. I.; Anoshkin, N. F.; Smal'shchenko. V. A.; Kaganovich, I. N.

ORG: none

TITLE: Master alloy. Class 40, No. 194322

SOURCE: Izobreteniya, promyshlennyye obraztsy, tovarnyye znaki, no. 8, 1967, 84

TOPIC TAGS: master alloy, chromium molybdenum alloy, aluminum containing alloy

ABSTRACT: This Author Certificate introduces a master alloy containing aluminum and molybdenum. To distribute the alloying elements uniformly in an ingot, this master alloy also contains chromium. The composition of the alloy is set as follows (%): 6—8 aluminum, 39—42 molybdenum, 51—54 chromium. [TD]

SUB CODE: 11/ SUBM DATE: none

UDC: 669.26'28'71.5.002.2

Card 1/1

APPROVED FOR RELEASE: 08/09/2001 CIA-RDP86-00513R002200210006-8"

"APPROVED FOR RELEASE: 08/09/2001 CIA-RDP86-00513R002200210006-8

Monograph

ACC NR: AM700175

Dobatkin, Vladimir Ivanovich; Anoshkin, Nikolay Fedorovich; Andreyev, Aleksandr Leonidovich; Bochvar, Georgiy Andreyevich; Muratov, Mark Ivanovich; Tetyukhin, Vladislav Valentinovich; Chistyakov, Yevgeniy Petrovich

Ingots of titanium alloys (Slitki titanovykh splavov) Moscow, Izd-vo "Metallurgiya," 1966, 285 p. illus., biblio. Errata slip inserted. 2,300 copies printed.

TOPIC TAGS: vacuum melting, titanium alloy, metal ingot, vacuum furnace, metal crystallization

PURPOSE AND COVERAGE: This book is intended for engineering personnel at plants and scientific workers of research institutes. It may also be useful to students and aspirants specializing in the field of metal study, casting of nonferrous alloys, and also in the study of new metal melting methods. The book summarizes results of using vacuum-arc melting of titanium alloys and outlines the modern technology of producing ingots. Particular attention is paid to problems of crystallization and ingot structure. Shrinkage phenomena, segregation and interaction between metal and gases, as well as redistribution of alloying elements during

UDC: 669.295

Card 1/4

APPROVED FOR RELEASE: 08/09/2001 CIA-RDP86-00513R002200210006-8"

"APPROVED FOR RELEASE: 08/09/2001 CIA-RDP86-00513R002200210006-8

ACC NR: AM700175 Monograph UR/

the melting are discussed. On the basis of an analysis of experimental findings, new concepts are developed and general laws governing the formation of ingot structure in vacuum-arc melting are discussed. On the basis of an analysis of experimental findings, new concepts are developed and general laws governing the formation of ingot structure in vacuum-arc melting with a consumable electrode are determined. Suggestions are made for selecting optimum technological conditions of melting and for improving ingot quality, and preventing defects.

TABLE OF CONTENTS [abridged]:

APPROVED FOR RELEASE: 08/09/2001 CIA-RDP86-00513R002200210006-8"

"APPROVED FOR RELEASE: 08/09/2001 CIA-RDP86-00513R002200210006-8

APPROVED FOR RELEASE: 08/09/2001 CIA-RDP86-00513R002200210006-8"

"APPROVED FOR RELEASE: 08/09/2001 CIA-RDP86-00513R002200210006-8

ACC NR: AM/700175 Monograph UR/

SUB CODE: 13/ SUBM DATE: 23Jun66/ ORIG REF: 070/ OTH REF: 022/

APPROVED FOR RELEASE: 08/09/2001 CIA-RDP86-00513R002200210006-8"

"APPROVED FOR RELEASE: 08/09/2001 CIA-RDP86-00513R002200210006-8

USSR

UDC 669.295.018.9(088.8)

TURKINA, A. N., ODOYEVSKIY, L. S., KHAZANOVA, T. P., KARSAKOV, G. V., ANOSHKIN, N. F., TSISTYAKOV, Ye. P., PAVLOV, A. G., TRUBIN, A. N., and TETYUKHIN, V. V.

"Master Alloy for Production of High-Strength Titanium Alloys"

USSR Author's Certificate No 309061, filed 15/07/69, published 20/09/71 (Translated from Referativnyy Zhurnal Metallurgiya, No 3, 1972, Abstract No 3G159P by G. Svodtseva)

Translation: A master alloy for the production of high-strength Ti alloys, containing Mo, V, and Al. To increase the quality of the ingots produced, the alloy includes Cr and Fe with the following relationships of components (in %): Mo 32-34, V 32-34, Al 18-22, Cr 6-8, Fe 5-7. The master alloy can be produced either by direct smelting of the metals in an open induction furnace or by an aluminothermal method in a furnace.

1/1

APPROVED FOR RELEASE: 08/09/2001 CIA-RDP86-00513R002200210006-8"

"APPROVED FOR RELEASE: 08/09/2001 CIA-RDP86-00513R002200210006-8

UDC 669.295.5'71'296'787.018.29(088.8)

USSR

KORNILOV, I. I., VAVILOVA, V. V., ANOSHKIN, N. F., FATKULLINA, L. P., and PERADZE, T. A.

"Titanium-Base Alloy"

USSR Authors' Certificate No 298677, Cl. C 22c 15/00, filed 29 Dec 69, published 12 May 71 (from RZh-Metallurgiya, No 1, Jan 72, Abstract No 1I755P by S. Kalabukhova)

Translation: A new Ti alloy with elevated strength properties is suggested. The Ti-base alloy containing Al and Zr as alloying additions is strengthened by the introduction of small quantities of O. The alloy contains (in %) Al 2-3, Zr 4-5, O 0.3-0.5, Ti the remainder. Mechanical properties of the alloy:

σ_β (20°) 90-120 kg/mm^2, σ_τ 85-115 kg/mm^2, δ 10-25%, ψ 30-52%;

σ_β (500°) 40-45 kg/mm^2, σ_τ 30-35 kg/mm^2, δ 17-20%, ψ 46-48%.

The alloy can be employed as a construction material. Semifinished products such as bars, sheets, and forgings can be made from it.

1/1

APPROVED FOR RELEASE: 08/09/2001 CIA-RDP86-00513R002200210006-8"

"APPROVED FOR RELEASE: 08/09/2001 CIA-RDP86-00513R002200210006-8

UDC 620.193.1:669.295

USSR

TOMASHOV, N. D., ANOSHKIN, N. F., MOROZNIKOVA, S. V., OGINSKAYA, YE. I., RUSKOL, YU. S., and CHERNOVA, G. P., Institute of Physical Chemistry, Academy of Sciences USSR

"Investigation of the Effect of Palladium on the Engineering, Mechanical and Corrosion Properties of Titanium Alloys OT4 and VT14"

Moscow, Zashchita Metallov, Vol 9, No 6, 1973, pp 672-675

Abstract: The possibility of increasing the corrosion resistance of titanium alloys OT4 and VT14 by means of alloying with 0.2% Pd was studied. The alloys were produced in a vacuum-arc furnace with the palladium added in the form of powder. Structure of OT4 and OT4+0.2% Pd was the alpha-solid solution, and VT14 and VT14+0.2% Pd--fine grains of the alpha- and alpha"-phases inside a beta-matrix. Strength properties of the titanium alloys were improved somewhat with the addition of palladium while ductility was lowered. The add tion of 2.0% Pd significantly lowered the oxidation tendency of the alloys at 600 and 800°C, and especially at 1000°C. 3 figures, 4 tables, 6 bibliographic references.

1/1

APPROVED FOR RELEASE: 08/09/2001 CIA-RDP86-00513R002200210006-8"

"APPROVED FOR RELEASE: 08/09/2001 CIA-RDP86-00513R002200210006-8

USSR UDC 621.315.592

ANOSOV, I.V., KUROVA, I.A., ORMONT, N.N. [Moscow State University imeni M. V. Lomonosov]

"On Some Electrical And Optical Properties Of Acousto-Electric Domains In GaAs"

Fizika i tekhnika poluprovodnikov, Vol 6, No 4, Apr 1972, pp 625-631

Abstract: The work is devoted to a detailed study of the distribution of the field in a specimen and to the establishment of the connection between the electrical characteristics in the domain and the infrared radiation. The experiments were conducted at room temperature on 12 x 0.4 x 0.7 mm GaAs specimens with $n = 2 \cdot 10^{15} cm^{-3}$ and $\mu = 4000 cm^2/v.sec$, oriented in the [110] direction. In specimens of compound section the effect was also studied of artifically created nonuniformities on the motion and properties of the domain. Infrared radiation from specimens with an acousto-electric domain is studied. At the boundary of the nonuniformities, where the field increases in the domain as a result of the effects of the acousto-electric flux, infrared radiation with a maximum of ~ 9100 Å appears. Possible mechanisms of the radiation are considered. The authors thank N.I. Paninoy for production of the specimens and V.S. Vavilov for discussion of the results of the work. 6 fig. 8 ref. Received by editors, 4 June 1971.

1/1

APPROVED FOR RELEASE: 08/09/2001 CIA-RDP86-00513R002200210006-8"

"APPROVED FOR RELEASE: 08/09/2001 CIA-RDP86-00513R002200210006-8

USSR

UDC 615.372:576.851.555].015.45:
[612.11+612.112.3+612.419

ANOSOV, I. Ya., LARINA, I. A., and ISPOLATOVSKAYA, M. V., Institute of Epidemiology and Microbiology imeni Gamaleya, Academy of Medical Sciences USSR

"Effect of Lecithinase C From Clostridium perfringens Type A on the Blood, Bone Marrow, and Phagocytic Activity of Leukocytes of Guinea Pigs Immunized With Analecithinase"

Moscow, Zhurnal Mikrobiologii, Epidemiologii i Immunobiologii, No 10, 1971, pp 65-69

Abstract: Guinea pigs immunized twice with analecithinase received a lethal dose of lecithinase C from Cl. perfringens type A 14 days later. Aside from slight lysis of erythrocytes accompanied by brief acceleration of the ESR, the peripheral blood and bone marrow cells did not undergo the progressive qualitative and quantitative changes observed in the nonimmunized control after intramuscular injection of 1 MLD of lecithinase C or a culture of Cl. perfringens type A. Immunization of the guinea pigs with analecithinase also protected the phagocytic activity of the leukocytes from the hemolytic action of lecithinase C. The effect was the same as that in animals that received Cl. perfringens type A toxoid. The microbes phagocytized by the leukocytes were digested, i.e., the microbial cells completely disintegrated.

1/1

APPROVED FOR RELEASE: 08/09/2001 CIA-RDP86-00513R002200210006-8"

"APPROVED FOR RELEASE: 08/09/2001 CIA-RDP86-00513R002200210006-8

USSR UDC 612.12+612.419].014.46:576.851.555.098.31

ANOSOV, I. Ya., ISPOLATOVSKAYA, M. V., and LARINA, I. A., Institute of Epidemiology and Microbiology imeni Gamaleya, Academy of Medical Sciences USSR

"The Effect of C-Lecithinase from Type A cl. perfringens on Guinea Pig Blood and Bone Marrow"

Moscow, Zhurnal Mikrobiologii, Epidemiologii i Immunobiologii, No 8, Aug 70, pp 117-122

Abstract: Guinea pigs were injected intramuscularly with purified C-lecithinase isolated from type A Cl. perfringens toxin (1 MLD). The animals developed hypochromic anemia, accompanied by aniso- and poikilocytosis, hemolysis, normoblastosis, accelerated ESR, and, in the white blood cells, eosinopenia, leukocytosis (changing to leukopenia with a shift to the left due to the appearance of rodnuclei, immature forms, and myelocytes), slight lymphocytosis against the background of leukopenia, and degeneration of formed elements, which intensified as the pathological processes developed. Edema, pronounced hyperemia, extensive hemorrhages, and karyopyknosis of many cells were evident in bone marrow within 4 hours of injection of C-lecithinase. The number of cells containing RNA and alkaline phosphatase decreased substantially. Erythropoiesis and leukopoiesis

APPROVED FOR RELEASE: 08/09/2001 CIA-RDP86-00513R002200210006-8"

"APPROVED FOR RELEASE: 08/09/2001 CIA-RDP86-00513R002200210006-8

USSR

ANOSOV, I. Ya., et al, Zhurnal Mikrobiologii, Epidemiologii i Immunobiologii, No 8, Aug 70, pp 117-122

were depressed. The symptoms produced by intramuscular injection of C-lecithinase from type A Cl. perfringens are quite similar to those observed in experimental gas gangrene.

2/2

APPROVED FOR RELEASE: 08/09/2001 CIA-RDP86-00513R002200210006-8"

"APPROVED FOR RELEASE: 08/09/2001 CIA-RDP86-00513R002200210006-8

Microbiology

USSR UDC 615.372:576.851.555].015.45+576.851.555.097.29

ANOSOV, I. Ya., and KLIMACHEVA, L. V., Institute of Epidemiology and Microbiology imeni Gamaleya, Academy of Medical Sciences USSR

"Morphological and Some Histochemical Changes in Guinea Pigs Produced by Cl. perfringens type A Hyaluronidase"

Moscow, Zhurnal Mikrobiologii, Epidemiologii i Immunobiologii, No 9, 1971, pp 133-136

Abstract: In vitro experiments showed that hyaluronidase isolated from Cl. perfringens type A toxin depolymerized hyaluronic acid of the ground substance of connective tissue (Wharton's jelly) from human umbilical cord. In guinea pig Achilles tendon, it caused the dense collagen bundles to separate into collagen fibers without undergoing necrosis. Intramuscular injection of guinea pigs with the enzyme caused a serous-exudative inflammation accompanied by edema, impairment of vascular permeability (intermuscular and endoneural diapedeses), slight alteration of muscular tissue, and disappearance of acid mucopolysaccharides from the dense connective tissue, endomysium, perimysium, and muscular walls of the blood vessels.

1/1

APPROVED FOR RELEASE: 08/09/2001 CIA-RDP86-00513R002200210006-8"

"APPROVED FOR RELEASE: 08/09/2001 CIA-RDP86-00513R002200210006-8

USSR UDC 621.762.002.5(088.8)

ANOSOV, N. S.

"Vertical Furnace for Sintering Metal Ceramic Products"

USSR Author's Certificate No 267024, Filed 13/12/68, Published 6/08/70 (Translated from Referativnyy Zhurnal-Metallurgiya, No 2, 1971, Abstract No 2 G476 P)

Translation: The furnace for sintering metal ceramic products contains a heating chamber, heater, and loading and unloading devices. In order to increase productivity, the furnace is equipped with rotating disks located along the height of the circular heating chamber and connected by channels through which the products being sintered pass.

1/1

APPROVED FOR RELEASE: 08/09/2001 CIA-RDP86-00513R002200210006-8"

"APPROVED FOR RELEASE: 08/09/2001 CIA-RDP86-00513R002200210006-8

Magnesium

USSR UDC 669.721

AKOSOV, V. F. and GUL'DIN, I. T.

"Fusibility and Electric Conductivity of Electrolytes for Refining Magnesium"

Moscow, Tsvetnyye metally, No 2, Feb 72, pp 42-43

Abstract: The study on the fusibility and electric conductivity of electrolytes for refining magnesium involved two systems of electrolytes comprising (wt. %) 33-53 NaCl, 22-33 KCl, 11-17 $MgCl_2$, 8-12 $BaCl_2$, 2-6 LiF, 2 CaF_2 for the first system and 32-50 NaCl, 21-32 KCl, 11-17 $MgCl_2$, 8-12 $BaCl_2$, 2-6 LiCl, 1 CaF_2 for the second system. The optimum electrolyte compositions with liquidus temperatures within 600-650°C show maximum specific electric conductivity from 2.65 to 2.93 $ohm^{-1}.cm^{-1}$ for system I and from 2.41 to 2.61 $ohm^{-1}.cm^{-1}$ for system II. It was found that 6% (wt.) lithium fluoride and chloride additions increase the specific conductivity of the compositions under study by 20 and 15%, respectively, as compared to identical systems without lithium salt addition. The increment of specific conductivity per 1°C for systems I and II is 0.00355 and 0.0032 ($ohm^{-1}.cm^{-1}$) deg, respectively. (1 table, 9 bibliographic references)

1/1

APPROVED FOR RELEASE: 08/09/2001 CIA-RDP86-00513R002200210006-8"

"APPROVED FOR RELEASE: 08/09/2001 CIA-RDP86-00513R002200210006-8

USSR UDC 543.52:546.791+546.841

ANOSOV, V. V., GAVRILOV, N. I., SMELKOVA, T. P.

"Simultaneous Radiometric Determination of Uranium and Thorium in Sulfate Solutions"

Moscow, Atomnaya Energiya, Vol 31, No 6, Dec 71, pp 633-635

Abstract: A method is developed for simultaneous determination of uranium and thorium in sulfate solutions by gamma spectrometric measurement without complicated chemical processing of the specimens. The standard for gamma-emission by uranium is a solution of uranyl nitrate in weak hydrochloric acid, and the thorium standard is prepared by dissolving thorium in sulfuric acid. The sensitivity threshold for 100-cc specimens with a measurement time of 10 minutes in each spectrometer channel is 0.015 g/l for uranium, and 0.01 g/l for thorium when the measurements are made in the 93 and 238 keV regions of the gamma spectrum, and 0.04 g/l for uranium and 0.01 g/l for thorium when measurements are made in the

1/2

APPROVED FOR RELEASE: 08/09/2001 CIA-RDP86-00513R002200210006-8"

"APPROVED FOR RELEASE: 08/09/2001 CIA-RDP86-00513R002200210006-8

USSR

ANOSOV, V. V., et al., Atomnaya Energiya, No 6, Dec 71, pp 633-635

185 and 238 keV regions. The divergence between radiometric and chemical analysis of uranium and thorium for specimens with a uranium content of 0.1-1.4 g/l and thorium of 0.08-0.5 g/l is nc more than ±10% when radioactivity is measured in the 95 and 238 regions of the spectrum. The results of radiometric determination are not affected by the presence of zirconium, rare earths or other elements which complicate chemical analysis. Radiometric determination with a single-channel analyzer is approximately four times as productive and considerably less expensive when compared with chemical determination. One figure, one table, bibliography of three titles.

2/2

APPROVED FOR RELEASE: 08/09/2001 CIA-RDP86-00513R002200210006-8"

"APPROVED FOR RELEASE: 08/09/2001 CIA-RDP86-00513R002200210006-8

USSR UDC 620.197.2

ANOSOVA, G. K., RUDOY, V. M., and LEVIN, A. I.

"Corrosion of Steel and the Effect of Certain Inhibitors When Applying Alternating Current"

Moscow, Zashchita Metallov, Vol 6, No 6, Nov-Dec 70, pp 765-768

Abstract: This article contains a discussion of the effect of inhibitors on the corrosion properties of St.3 steel when an alternating current is applied. Graphs are presented showing the corrosion rate and the tangent of the phase shift angle as functions of the concentration of inhibitors for $NaC_7H_5O_2$, Na_3PO_4, and $K_2Cr_2O_7$, at a frequency of f = 500 hertz, with a sinusoidal current density of 40 milliamps/cm^2 and a corrosion test time of 7.5 hours. It is pointed out that the retarding of electrocorrosion when applying an alternating current can be considered the result of retarding the anodic reaction of solution of the metal and increasing the proportion of the capacitive current. Insignificant additions of the chemical inhibitors to the electrolyte lead to retarding of the corrosion process. However, the protective effect of Na_3PO_4 drops from 94.7% to 62.3% on application

1/2

APPROVED FOR RELEASE: 08/09/2001 CIA-RDP86-00513R002200210006-8"

"APPROVED FOR RELEASE: 08/09/2001 CIA-RDP86-00513R002200210006-8

USSR

ANOSOVA, G. M., et al., Zashchita Metallov, Vol 6, No 6, Nov-Dec 70, pp [illegible]

of an alternating current. The protective capacity of the investigated inhibitors compares as follows: $K_2Cr_2O_7 > Na_3PO_4 > MnCl_2$. From the experiments formed the conclusion is drawn that the effect of inhibitors during electrocorrosion of steel is exhibited in two ways: directly by retarding the anodic solution rate and indirectly by increasing the proportion of the nonFaraday current.

2/2

APPROVED FOR RELEASE: 08/09/2001 CIA-RDP86-00513R002200210006-8"

"APPROVED FOR RELEASE: 08/09/2001 CIA-RDP86-00513R002200210006-8

1/2 011 UNCLASSIFIED PROCESSING DATE--20NOV70

TITLE--ELIMINATION OF QUACK GRASS BEFORE THE PLANTING OF STRAWBERRIES -U-

AUTHOR--ANFALOV, V.A.

COUNTRY OF INFO--USSR

SOURCE--KHIM. SEL. KHOZ. 1970, 8(3), 202-4

DATE PUBLISHED--------70

SUBJECT AREAS--AGRICULTURE, BIOLOGICAL AND MEDICAL SCIENCES

TOPIC TAGS--AGRICULTURE CROP, HERBICIDE, DIESEL FUEL

CONTROL MARKING--NO RESTRICTIONS

DOCUMENT CLASS--UNCLASSIFIED

PROXY REEL/FRAME--3001/0515 STEP NO--UR/0394/70/008/003/0202/0204

CIRC ACCESSION NO--AP0126263

UNCLASSIFIED

APPROVED FOR RELEASE: 08/09/2001 CIA-RDP86-00513R002200210006-8"

"APPROVED FOR RELEASE: 08/09/2001 CIA-RDP86-00513R002200210006-8

2/2 011 UNCLASSIFIED PROCESSING DATE--20NOV70

CIRC ACCESSION NO--AP0126263

ABSTRACT/EXTRACT--(U) GP-0- ABSTRACT. ALMOST COMPLETE QUACK GRASS CONTROL BEFORE PLANTING STRAWBERRIES WAS OBTAINED WITH DOUBLE SOIL DISKING FOLLOWED BY INCORPORATION OF DALAPON (I) (20 KG-HA) OR NA TCA (II) (32 KG-HA). THE MIXTS. OF I OR II WITH ATRAZINE (III) (10 KG-HA) OR EPTAM (IV) (20 KG-HA) GAVE COMPLETE CONTROL BUT THOSE WITH SIMAZINE OR PROMETRYNE (BOTH AT 10 KG-HA) WERE LESS EFFECTIVE. FOR II, THE SPLIT APPLICATION (AT DISKING AND 10 DAYS LATER WHEN QUACK GRASS WAS 12-15 CM HIGH) IS RECOMMENDED. ADDN. OF DIESEL OIL INCREASED THE EFFECTIVENESS OF II. THE HERBICIDES WERE LESS EFFECTIVE WHEN APPLIED AS SPRAYS (WITHOUT DISKING) ON THE 12-15 CM HIGH QUACK GRASS. THE PLOTS TREATED WITH I AND II MAY BE PLANTED WITH STRAWBERRIES AFTER 3 MONTHS, THOSE TREATED WITH I OR II PLUS IV AFTER 5 MONTHS, AND THOSE WITH THE MIXTS. CONTG. III AFTER A YEAR. I, II, AND THEIR MIXTS. WITH III OR IV DID NOT AFFECT THE N FORM CONTENTS AND PH OF SOIL. FACILITY: VSES. NAUCH.-ISSLED. INST. SADOVOD. IM. MICHURINA, USSR.

UNCLASSIFIED

APPROVED FOR RELEASE: 08/09/2001 CIA-RDP86-00513R002200210006-8"

"APPROVED FOR RELEASE: 08/09/2001 CIA-RDP86-00513R002200210006-8

1/2 018 UNCLASSIFIED PROCESSING DATE--04DEC70

TITLE--HIGH ENERGY SCATTERING MODEL WITH A VIOLATION OF THE POMERANCHUK THEOREM -U-

AUTHOR-(04)-ANSELM, A.A., DANILOV, G.S., DYATLOV, I.T., LEVIN, YE.M.

COUNTRY OF INFO--USSR

A

SOURCE--YAD. FIZ. 1970, 11(4), 896-901

DATE PUBLISHED--------70

SUBJECT AREAS--PHYSICS

TOPIC TAGS--PARTICLE INTERACTION, ANTIPARTICLE, INTEGRAL CROSS SECTION, NUCLEAR MODEL, SCATTERING CROSS SECTION, ENERGY SPECTRUM, HIGH ENERGY PARTICLE

CONTROL MARKING--NO RESTRICTIONS

DOCUMENT CLASS--UNCLASSIFIED

PROXY REEL/FRAME--3007/1000 STEP NO--UR/0367/70/011/004/0896/0901

CIRC ACCESSION NO--AP0136427

UNCLASSIFIED

APPROVED FOR RELEASE: 08/09/2001 CIA-RDP86-00513R002200210006-8"

"APPROVED FOR RELEASE: 08/09/2001 CIA-RDP86-00513R002200210006-8

2/2 018 UNCLASSIFIED PROCESSING DATE--04DEC70

CIRC ACCESSION NO--AP0136427

ABSTRACT/EXTRACT--(U) GP-0- ABSTRACT. EXAMPLES ARE PRESENTED FOR THE POSSIBLE VIOLATION OF THE THEORY OF THE EQUALITY OF THE TOTAL CROSS SECTION OF PARTICLE AND ANTIPARTICLE INTERACTIONS (I. YA. POMERANCHUK, 1958) IN MODELS BASED ON THE LOGARITHMIC DEPENDENCE OF THE INCREASE IN THE INTERACTION RADIUS WITH THE INCREASING ENERGY. THE EXAMPLES SATISFIED THE GENERAL PRINCIPLES OF THIS THEORY, I.E. THE ANALYTICITY, THE CROSSING SYMMETRY, AND UNITARITY. THE DIFFRACTIONAL MODELS WITH THE S CHANNEL PARTIAL WAVE AMPLITUDE EQUAL SIMILAR TO L-IN S AND THAT WITH THE TOTAL ABSORPTION AND CROSS SECTION SIGMA SUBTOT SIMILAR TO IN PRIME2 S ARE DISCUSSED IN DETAIL. FACILITY: FIZ.-TEKH. INST. IM. IOFFE, LENINGRAD, USSR.

UNCLASSIFIED

APPROVED FOR RELEASE: 08/09/2001 CIA-RDP86-00513R002200210006-8"

"APPROVED FOR RELEASE: 08/09/2001 CIA-RDP86-00513R002200210006-8

USSR UDC 669.046.5

ANSHELES, I. I., FEDOSEYEV, V. V., OYSK, G. N., YEGOROV, A. V., SOROKIN, S. P., TYURIN, Ye. I., DANILIN, V. I., SELIVANOV, V. M., SIVKOV, S. S., ZYRYANOV, Yu. Ye., and BALDAYEV, B. Ya.

"Use of Electromagnetic Stirring in Vacuum Melting of Steel in a Ladle"

Moscow, V sb. "Sovremennyye problemy kachestva stali" (MISiS), (Collection of Works. Modern Problems of Steel Quality) (Moscow Institute of Steel and Alloys), Izd-vo "Metallurgiya," No 61, 1970, pp 222-227

Translation of Abstract: Brief technical characteristics are given of the electromagnetic stirring of steel in a ladle. Data are presented on the effect of electromagnetic metal stirring on the uniform distribution of added deoxidizers and alloying elements, and also on the significant increase in the duration of vacuum smelting. A new production technology for the ShKh15 steel is presented in which complete deoxidation and alloying is conducted in the ladle at the end of vacuum smelting. The suggested method is theoretically substantiated. The results of the first experimental melts are presented. 3 tables.

1/1

APPROVED FOR RELEASE: 08/09/2001 CIA-RDP86-00513R002200210006-8"

"APPROVED FOR RELEASE: 08/09/2001 CIA-RDP86-00513R002200210006-8

Acc. Nr: AT0102945 Abstracting Service: CHEMICAL ABST. 6-70 Ref. Code: UR0148

114174b Thermodynamic bases for controlling the deoxidizing capacity of carbon during in vacuo alloying of steel. Fedoseev, V. V.; Zyryanov, Yu. E.; Ansheles, L. I.; Oiks, G. N. (Mosk. Inst. Stali Splavov, Moscow, USSR). *Izv. Vysth. Ucheb. Zaved., Chern. Met.* 1970, 13(1), 43-7 (Russ). It was shown exptl. that electromagnetic mixing provided thorough homogenization of the added metals, which increased the time of the vacuum treatment of the steel, utilized more completely the deoxidizing capacity of C, and shortened the time the steel was under vacuum. The thermodynamic anal. of the overall reaction for the oxidn. of C and Cr during the melting of the steel in vacuo is given for various alloys (1%C, 1, 5%Cr-steel ShKh15; 0.3%C, 1%Cr-steel 30KhGSA and other Fe-C-O and Fe-C-O-Cr systems). The equil. capacity of the O in dependence upon the temp. and CO partial pressure is given. It follows from the results that it is better to change the present technol. of steel alloying.

J. Stejskal

REEL/FRAME 19861011

APPROVED FOR RELEASE: 08/09/2001 CIA-RDP86-00513R002200210006-8"

"APPROVED FOR RELEASE: 08/09/2001 CIA-RDP86-00513R002200210006-8

USSR UDC 621.90

TYVES, L. I., Candidate of Technical Sciences and ANSHIN, S. S., Graduate Student Moscow Aviation Institute

"Qualitative Evaluation of Manipulators"

Izvestiya Vysshikh Uchebnykh Zavedeniy, Mashinostroyeniye, No 11, 1971, pp 41-45.

ABSTRACT: Criteria are suggested for the accuracy of reproduction of positions of the master mechanism by the actuating mechanism of a copying manipulator, as well as the quality of sensation of forces by the feedback tracking systems. An example is presented for calculation of these criteria for a planar model of a copying manipulator kinematically similar to the human hand. The "sensing error" used to evaluate the operation of the manipulator combines the errors in transmission of force and torque.

1/1

APPROVED FOR RELEASE: 08/09/2001 CIA-RDP86-00513R002200210006-8"

"APPROVED FOR RELEASE: 08/09/2001 CIA-RDP86-00513R002200210006-8

USSR UDC 621.383.51:535.215.6

ANSHON, A.V., KARPOVICH, I.A., PERSHIN, YU.M.

"Effect Of Internal Shunting Resistance On The Characteristics Of Film Photodetectors With A CdS--Cu_2S Heterojunction"

Elektron. tekhnika. Nauchno-tekhn.sb. Elektronnoluch. i fotoelektr. pribory (Electronic Technology. Scientific-Technical Collection. Electron Beam and Photoelectric Devices), 1970, Issue 2(16), pp 52-59 (from Ref--Elektronika i yeye primeneniye, No 4, April 1971, Abstract No 4B529)

Translation: It is shown that the unusually small response of film photodetectors with a CdS--Cu_2S heterojunction in an open circuit regime at low illumination ($E < 100$ lux) is connected with the presence of shunting transition resistance. The dependences are obtained of the shunt resistance on the temperature and illumination, from which it follows that the shunt consists of two series connected resistances, one of which has metallic characteristics and the other semiconductor. As a result of consideration of the construction of photodetectors, a conclusion is given on the nature of the constituents of the shunt. 3 ill. 2 ref. Author's abstract.

1/1

APPROVED FOR RELEASE: 08/09/2001 CIA-RDP86-00513R002200210006-8"

"APPROVED FOR RELEASE: 08/09/2001 CIA-RDP86-00513R002200210006-8

Refractory Materials

USSR UDC 546.623'21+546.74'21):541.123.2

GAVRISH, A. M., ZOZ, YE. I., ANSIMOVA, T. A., PITAK, N. V., and KARYAKIN, L. I., Ukrainian Scientific Research Institute of Refractory Materials

"Processes Taking Place in the Al_2O_3-NiO System During Heating in Oxidizing and Reducing Media"

Moscow, Izvestiya Akademii Nauk SSSR, Neorganicheskiye Materialy, Vol 8, No 6, Jun 72, pp 1175-1177

Abstract: An investigation was made of the change of phase composition of the carrier during heating in oxidizing and reducing media in the presence of a nickel catalyst. The specimens were prepared from the principal components of the carrier, electrocorundum (with 98.8% Al_2O_3, grain size $< 50\ \mu$), technical alumina (98.6% Al_2O_3 grain size $< 50\ \mu$), and nickel nitrate ($Ni(NO_3)_2 \cdot 6H_2O$). The corundum and alumina specimens had additions of 1, 10, 25, and 50% nickel nitrate. With an increasing concentration of nickel nitrate, there are only weak lines of spinel at 1500°C; at 10% the spinel develops at 1200°C, and at 25% it develops at 900°C. According to findings of other authors, the development of spinel was observed at 700°C and up to 1500°C. The behavior of corundum and alumina specimens in the process of

1/2

APPROVED FOR RELEASE: 08/09/2001 CIA-RDP86-00513R002200210006-8"

"APPROVED FOR RELEASE: 08/09/2001 CIA-RDP86-00513R002200210006-8

USSR

GAVRISH, A. M., et al., Izvestiya Akademii Nauk SSSR, Neorganicheskiye Materialy, Vol 8, No 6, Jun 72, pp 1175-1177

temperature increase up to 1500°C and during holding in air is discussed and compared with data of other authors. One table, eight bibliographic references.

2/2

APPROVED FOR RELEASE: 08/09/2001 CIA-RDP86-00513R002200210006-8"

"APPROVED FOR RELEASE: 08/09/2001 CIA-RDP86-00513R002200210006-8

1/2 012 UNCLASSIFIED PROCESSING DATE--20NOV70

TITLE--PACKING COMPOUND FOR THE HEARTHS OF HEATING FURNACES -U-

AUTHOR-(02)-PITAK, A.V., ANSIMOVA, T.A.

COUNTRY OF INFO--USSR

SOURCE--OGNEUPORY 1970, 35(5), 32-6

DATE PUBLISHED--------70

SUBJECT AREAS--MATERIALS, MECH., IND., CIVIL AND MARINE ENGR

TOPIC TAGS--INDUSTRIAL FURNACE, CORUNDUM, REFRACTORY MATERIAL, PHOSPHORIC ACID

CONTROL MARKINGS--NO RESTRICTIONS

DOCUMENT CLASS--UNCLASSIFIED

PROXY REEL/FRAME--3006/0630 STEP NO--UR/0151/70/035/005/0032/0036

APPROVED FOR RELEASE: 08/09/2001 CIA-RDP86-00513R002200210006-8"

"APPROVED FOR RELEASE: 08/09/2001 CIA-RDP86-00513R002200210006-8

2/2 012 UNCLASSIFIED PROCESSING DATE--[illegible]

CIRC ACCESSION NO--AP6[illegible]

ABSTRACT/EXTRACT--(U) SP-C- ABSTRACT. BY USE OF SINTERED COMPOUND AND ELEC. CORUNDUM, CLAYS, WERE ASSAYED OUT FOR THE PACKING COMPD. BASED ON ORTHOPHOSPHORIC ACID, WHICH ARE RECOMMENDED FOR THE FILLING OF THE BOTTOMS OF HEATING FURNACES. THE SAMPLES AND THE ARTICLES PREPD. FROM THESE PACKING COMPDS. BY PRESSING AND BY PNEUMORAMMING ARE CHARACTERIZED BY GOOD PROPERTIES. FACILITY: UKR. NAUCH. ISSLED. INST. OGNEUPOR., KHARKOV, USSR.

UNCLASSIFIED

APPROVED FOR RELEASE: 08/09/2001 CIA-RDP86-00513R002200210006-8"

"APPROVED FOR RELEASE: 08/09/2001 CIA-RDP86-00513R002200210006-8

USSR

APPROVED FOR RELEASE: 08/09/2001 CIA-RDP86-00513R002200210006-8"

"APPROVED FOR RELEASE: 08/09/2001 CIA-RDP86-00513R002200210006-8

APPROVED FOR RELEASE: 08/09/2001 CIA-RDP86-00513R002200210006-8"

"APPROVED FOR RELEASE: 08/09/2001 CIA-RDP86-00513R002200210006-8

1/2 030 UNCLASSIFIED PROCESSING DATE--13NOV70

TITLE--ON MORPHOLOGICAL CHANGES BETWEEN CENTRAL STRUCTURES OF THE AUDITORY ANALYZER IN PROLONGED INTENSIVE EFFECT OF NOISE -U-

AUTHOR-(03)-STRAKHOV, A.G., KORSHUNOVA, V.I., ANTAKOVA, N.V.

COUNTRY OF INFO--USSR

SOURCE--BYULLETEN' EKSPERIMENTAL'NOY BIOLOGII I MEDITSINY, 1970, VOL 49, NR 6, PP 95-97

DATE PUBLISHED--------70

SUBJECT AREAS--BIOLOGICAL AND MEDICAL SCIENCES

TOPIC TAGS--WHITE NOISE, AUDITORY SYSTEM, NEURON, MORPHOLOGY, CELL PHYSIOLOGY

CONTROL MARKING--NO RESTRICTIONS

DOCUMENT CLASS--UNCLASSIFIED

PROXY REEL/FRAME--3004/0570 STEP NO--UR/0219/70/049/006/0095/0097

CIRC ACCESSION NO--AP0131193

UNCLASSIFIED

APPROVED FOR RELEASE: 08/09/2001 CIA-RDP86-00513R002200210006-8"

"APPROVED FOR RELEASE: 08/09/2001 CIA-RDP86-00513R002200210006-8

2/2 030 UNCLASSIFIED PROCESSING DATE--13NOV70

CIRC ACCESSION NO--AP0131193

ABSTRACT/EXTRACT--(U) GP-0- ABSTRACT. IN EXPERIMENTAL CONDITIONS THE AUTHORS STUDIED THE EFFECT OF PROLONGED NOISE ON THE DEVELOPMENT OF MORPHOLOGICAL CHANGES IN NEURONS OF DIFFERENT REGIONS OF THE AUDITORY ANALYZER IN ALBINO RATS. MANY DAY EFFECT OF NOISE LEADS TO THE DEVELOPMENT OF CHANGES IN THE NISSL'S SUBSTANCE, NUCLEI AND NUCLEOLI OF NERVE CELLS. IN EXPOSURES LASTING FROM 1 TO 7 DAYS THE MOST SIGNIFICANT ALTERATIONS WERE REVEALED IN THE ACOUSTIC REGIONS OF THE CORTEX OF GREAT HEMISPHERES. IN LARGE TERMS OF THE EFFECT (15-28 DAYS) CORTICAL CHANGES GRADUALLY DIMINISHED, WHEREAS IN THE SUBCORTICAL FORMATIONS OF THE BRAIN THEY GRADUALLY INTENSIFIED. IT IS ASSUMED THAT PROTRACTED EFFECT OF INTENSIVE NOISE LEADS TO BLOCK ON THE SUBCORTICAL LEVEL OF AFFERENT IMPULSATION THIS MAKING IT POSSIBLE TO CARRY OUT RESTORATIVE PROCESSES IN THE CORTICAL LAYER OF THE AUDITORY ANALYZER.

FACILITY: GORKY MEDICAL INSTITUTE.

UNCLASSIFIED

APPROVED FOR RELEASE: 08/09/2001 CIA-RDP86-00513R002200210006-8"

"APPROVED FOR RELEASE: 08/09/2001 CIA-RDP86-00513R002200210006-8

USSR

SHAKHOV, A. B., [illegible], V. I., and [illegible], N. V., Chair of Normal Physiology, Gor'kiy Medical Institute [illegible] S. M. Kirov

"Morphological Changes in the Central Structures of the Auditory Analyzer After Prolonged Exposure to Noise"

Moscow, Byulleten' Eksperimental'noy Biologii i Meditsiny, [illegible], pp [illegible]

Abstract: Several groups of rats were continuously exposed to noise (up to 3000 Hz) for periods of up to 23 days. Significant changes were noted in the Nissl bodies (different forms of chromatolysis - perinuclear, peripheral, total), nuclei, (peripheral location, degeneration, pyknosis), and nucleoli two or three present in many cells. The intensity of the changes varied with the part of the brain and the duration of exposure. After 1 to 7 days they were most pronounced in the acoustic cortex, less so in the stem structures. After 15 to 23 days, the cortical changes were more diffuse, but in the subcortical formations - corpora quadrigemina, corpus geniculatum mediale, and area vestibularis - the changes gradually intensified.

1/1

APPROVED FOR RELEASE: 08/09/2001 CIA-RDP86-00513R002200210006-8"

"APPROVED FOR RELEASE: 08/09/2001 CIA-RDP86-00513R002200210006-8

USSR UDC:541.113

ANTANOVICH, A. A., PLOTNIKOV, M. A., SAVEL'YEV, G. Ya., Moscow

"Area of Applicability of Virial Equation of State With Various Numbers of Virial Coefficients"

Novosibirsk, Fizika Goreniya i Vzryva, Vol. 6, No. 3, Sep 70, pp. 267-272

Abstract: The most general form of the equation of state suitable for use over a broad range of gas temperatures is the virial form of the equation. Some results are presented in this article from numerical investigation of the area of applicability of this equation using various numbers of terms in the virial series. These results can be used in the practice of thermodynamic calculations, since in many cases definition of the optimal number of terms in the series depending on the required calculation accuracy is important both from the standpoint of decreasing error resulting from using insufficient numbers of terms and from the standpoint of decreasing the volume of computation by reducing the number of terms as greatly as possible. The investigation is performed for nitrogen in the temperature

APPROVED FOR RELEASE: 08/09/2001 CIA-RDP86-00513R002200210006-8"

"APPROVED FOR RELEASE: 08/09/2001 CIA-RDP86-00513R002200210006-8

USSR UDC:541.113

ANTANOVICH, A. A., PLOTNIKOV, M. A., SAVEL'YEV, G. Ya., Novosibirsk,
Fizika Goreniya i Vzryva, Vol. 6, No. 3, Sep 70, pp. 267-272

range from 300-3000°K. The results indicate that in the 1000-3000°K range, the use of five virial coefficients is quite sufficient for practical application of the equation at pressures up to several tens of kilobars. At temperatures over 3000°K, the pressure at which the formula can be used exceeds 100 Kbar.

2/2

APPROVED FOR RELEASE: 08/09/2001 CIA-RDP86-00513R002200210006-8"

"APPROVED FOR RELEASE: 08/09/2001 CIA-RDP86-00513R002200210006-8

USSR

UDC 615.016:546

ANTBAYEV, T. KH.

"Functional State of Rat Kidneys Under the Chronic Effect of Hydrogen Fluoride"

Tr. NII krayev. patol. KazSSR (Works of the Scientific Research Institute of Marginal Pathology of the Kazakh SSSR), 1972, No 23, pp 98-100 (from RZh--Farmakologiya, Khimioterapevticheskiye Sredstva. Toksikologiya, No 3, Mar 73, Abstract No 3.54.684)

Translation: A rat was subjected to daily inhalation poisoning with HF for six hours in a dosage equal to the MPC (first group) or 0.5 MPC (second group). After one month the increase in weight of the animals of the first group was 15 percent than in the control; in the blood a trend was noted toward a decrease in Hb and the number of erythrocytes, lymphocytopenia and neutrophilises. The diurnal diuresis was reduced from 11.7 to 7.6 mℓ, the proportion of urea increased from 0.964 to 1.088, the amount of albumen in the urea increased from 13.6 to 37.2 mg%, and in the blood it dropped from 8.71 to 6.99 g%, the creatinin concentration in the urea increased sharply. After three months, in the blood of the animals in the second group, a reduction in Hb and the

1/2

APPROVED FOR RELEASE: 08/09/2001 CIA-RDP86-00513R002200210006-8"

"APPROVED FOR RELEASE: 08/09/2001 CIA-RDP86-00513R002200210006-8

USSR

AYTBAYEV, T. KH, Tr. NII krayev. patol. KazSSR, 1972, No 23, pp 98-100

number of erythrocytes was noted, and in the first group the Hb was significantly reduced without any changes in the blood formula. The diuresis of the animals in the second group dropped to 6.4 mℓ, the amount of albumen and creatinin increased to 2.9 and 5.58 mg%; for the animals in the first group the diuresis and the urea composition were normalized, and the weight coefficient of the kidneys increased. After six months the weight coefficient of the kidneys of the animals in the first group doubled, the albumen concentration and creatinin concentration in the urea were increased; the alterations in the animals of the second group were analogous, but less expressed.

2/2

APPROVED FOR RELEASE: 08/09/2001 CIA-RDP86-00513R002200210006-8"

"APPROVED FOR RELEASE: 08/09/2001 CIA-RDP86-00513R002200210006-8

USSR

ANTIK, A. P., ARSHAVSKIY, V. V., and ROZENSHTEYN, G. Sh., Moscow Scientific Research Institute of Psychiatry, Ministry of Public Health, RSFSR

""II. The Role of Motivation Centers in the Control of Convulsive Brain Activity"

Moscow, Biofizika, Vol 17, No 4, 1972, pp 681-686

Abstract: The second part of an experimental study of a control model of convulsive brain activity, conducted in 1968-1969, is presented. The first part was published in the previous issue of this journal. The present article contains experimental material obtained from cats, rabbits, and rats, and from experimental corazole and audiogenic models of convulsive activity. This material confirms the basic results of a qualitative model of epilepsy; these can be reduced to the following. Epileptic activity originates during a delay in "media reversion," when high-amplitude potentials appear in the cortex; these are signals announcing the approach of the system to a "dangerous" state. This state arises because the organism receives an additional flow of impulses into the "negative" motivation centers, and a decrease in the flow of impulses into the "positive" centers. Electrical stimulation of the "negative" zones of the hypothalamus brings about the development and

APPROVED FOR RELEASE: 08/09/2001 CIA-RDP86-00513R002200210006-8"

"APPROVED FOR RELEASE: 08/09/2001 CIA-RDP86-00513R002200210006-8

USSR

ANTIK, A. P., et al., Biofizika, Vol 17, No 4, 1972, pp 681-686

amplification of convulsive discharges in the cortex. The suppression of the convulsive activity in the cortex is linked to the creation of an additional flow of impulses in the "positive" motivation centers and a weakening of pulsation in the "negative" centers. Stimulation of "positive" zones of the hypothalamus brings about the weakening and cessation of convulsive activity in the cortex.

2/2

APPROVED FOR RELEASE: 08/09/2001 CIA-RDP86-00513R002200210006-8"

"APPROVED FOR RELEASE: 08/09/2001 CIA-RDP86-00513R002200210006-8

1/2 021 UNCLASSIFIED PROCESSING DATE--11SEP70

TITLE--RESISTANCE OF HEATING SURFACES OF MAZUT BOILERS TO VANADIUM CORROSION -U-

AUTHOR--ANTIKAYN, P.A., VASYUCHKOVA, K.I., GLEBOV, V.P.

COUNTRY OF INFO--USSR

SOURCE--MOSCOW, ELEKTRICHESKIYE STANTSII, NR 4, 1970, PP 34-38

DATE PUBLISHED-------70

SUBJECT AREAS--MECH., IND., CIVIL AND MARINE ENGR, MATERIALS

TOPIC TAGS--STEAM SUPERHEATER, VANADIUM CORROSION, BIBLIOGRAPHY, AUSTENITIC STEEL, STEAM BOILER, PETROLEUM RESIDUE/(U)PK41 MUZAT BOILER

CONTROL MARKING--NO RESTRICTIONS

DOCUMENT CLASS--UNCLASSIFIED

PROXY REEL/FRAME--1987/1411 STEP NO--UR/0104/70/000/004/0034/0038

CIRC ACCESSION NO--AP0104725

UNCLASSIFIED

APPROVED FOR RELEASE: 08/09/2001 CIA-RDP86-00513R002200210006-8"

"APPROVED FOR RELEASE: 08/09/2001 CIA-RDP86-00513R002200210006-8

2/2 021 UNCLASSIFIED PROCESSING DATE--11SEP70

CIRC ACCESSION NO--AP0104725

ABSTRACT/EXTRACT--(U) GP-0- ABSTRACT. RESULTS ARE QUOTED OF LABORATORY INVESTIGATIONS OF THE SPECIMENS OF STEAM SUPERHEATER PIPES FROM DIFFERENT STEELS OF PEARLITIC AND AUSTENITIC CLASSES. THE SPECIMENS WERE TESTED IN AN ARTIFICIAL MEDIUM CONTAINING 87PERCENT VANADIUM DIOXIDE AND IN DEPOSITS REMOVED FROM PIPES OF A CONVECTIVE STEAM SUPERHEATER OF THE PK-41 GAZ MAZUT BOILER. RECOMMENDATIONS ARE GIVEN FOR THE USE OF VARIOUS STEEL BRANDS.

UNCLASSIFIED

APPROVED FOR RELEASE: 08/09/2001 CIA-RDP86-00513R002200210006-8"

"APPROVED FOR RELEASE: 08/09/2001 CIA-RDP86-00513R002200210006-8

1/2 033 UNCLASSIFIED PROCESSING DATE- 09OCT70

TITLE--THE STABILITY OF WELDED PIPE CONNECTIONS OF HEATING SURFACES IN THE CASE OF ACID RINSES BY A AMMONIUM MONOCITRATE AND TRILON B -U-

AUTHOR-(03)-ANTIKAYN, P.A., NOVI, YU.O., TARATUTA, V.A.

COUNTRY OF INFO--USSR

SOURCE--LENINGRAD, ENERGOMASHINOSTROYENIYE, NO 3, 1970, PP 31-34

DATE PUBLISHED-------70

SUBJECT AREAS--MECH., IND., CIVIL AND MARINE ENGR, MATERIALS

TOPIC TAGS--PIPE WELDING, STEAM BOILER, METAL CLEANING, HYDROCHLORIC ACID, RESEARCH FACILITY, ALLOY DESIGNATION, STAINLESS STEEL, LOW ALLOY STEEL, CARBON STEEL, COMPLEX COMPOUND, THERMAL STABILITY, METALLOGRAPHY/(U)ST20 CARBON STEEL, (U)12KH1MF LOW ALLOY STEEL, (U)KH18N12T STAINLESS STEEL

CONTROL MARKING--NO RESTRICTIONS

DOCUMENT CLASS--UNCLASSIFIED

PROXY REEL/FRAME--1993/0879 STEP NO--UR/0114/70/000/003/0031/0034

CIRC ACCESSION NO--AP0113727

UNCLASSIFIED

APPROVED FOR RELEASE: 08/09/2001 CIA-RDP86-00513R002200210006-8"

"APPROVED FOR RELEASE: 08/09/2001 CIA-RDP86-00513R002200210006-8

2/2 033 UNCLASSIFIED PROCESSING DATE--29OCT70

CIRC ACCESSION NO--AP0113727

ABSTRACT/EXTRACT--(U) GP-0- ABSTRACT. IN THE USSR AND ABROAD, FOR THE REMOVAL OF DEPOSITS FORMED ON THE HEATING SURFACES OF BOILERS, SOLUTIONS OF COMPLEX FORMING REAGENTS ARE USED. DATA UPON THE EFFECT OF THESE SOLUTIONS, IN PARTICULAR AMMONIUM MONOCITRATE AND TRILON B, UPON THE STABILITY OF THE WELDED PIPE JOINTS OF HEATING SURFACES ARE PRACTICALLY ABSENT. IT IS MERELY KNOWN THAT WHEN CHEMICAL CLEANINGS ARE CARRIED OUT PRIOR TO THE START OF OPERATIONS, THERE ARE PRACTICALLY NO SPECIFIC DIFFICULTIES CONNECTED WITH IMPAIRMENT OF THE DENSITY AT THE WELDING SITES. NEVERTHELESS, AS HAS BEEN SHOWN BY STUDIES OF THE ALL UNION INSTITUTE OF HEAT ENGINEERING IMENI F. E. DZERZHINSKIY, WHEN THE PIPES ARE RINSED BY A WEAK SOLUTION OF INHIBITED HYDROCHLORIC ACID THE WELDED SEAMS ARE THE MOST VULNERABLE POINTS OF THE WATER AND STEAM CHANNEL. IN THIS CONNECTION, A STUDY WAS CARRIED OUT AT THE MOSCOW BRANCH OF THE CENTRAL SCIENTIFIC RESEARCH, PLANNING ADD DESIGN BOILER AND TURBINE INSTITUTE, WHICH HAS MADE IT POSSIBLE TO CLEAR UP THE QUESTION CONCERNING THE BEHAVIOR OF WELDED PIPE CONNECTIONS UNDER CONDITIONS OF REPEATED CLEANING OF BOILERS WITH THE USE OF COMPLEX FORMING REAGENTS. INCLUDED IN THE INVESTIGATION WERE X RAY, MICROSTRUCTURE, AND METALLOGRAPHIC TESTS. AS A RESULT OF THE WORK PERFORMED, IT MAY BE CONSIDERED AS ESTABLISHED THAT WELDED JOINTS OF STEELS 20, 12KH1MF AND KH18N12T, MADE BY CONTACT, ELECTRIC ARC, AND GAS WELDING, DO NOT IMPOSE ANY RESTRICTIONS ON THE CONDUCT OF OPERATIONAL CHEMICAL CLEANINGS OF THE UNIFLOW BOILERS WITH THE USE OF COMPLEX FORMING REAGENTS (AMMONIUM MONOCITRATE MIXED WITH TRILON B).

UNCLASSIFIED

APPROVED FOR RELEASE: 08/09/2001 CIA-RDP86-00513R002200210006-8"

"APPROVED FOR RELEASE: 08/09/2001 CIA-RDP86-00513R002200210006-8

USSR

SUDAKOV, K. V., ANTIMONIY, G. D., First Moscow Medical Institute imeni I. M. Sechenov

"Central Mechanisms of the Effect of Electromagnetic Fields"

Moscow, Uspekhi Fiziologicheskikh Nauk, Vol 4, No 2, Apr/May/Jun 73, pp 101-135

Abstract: A study was made of the presently known published data pertaining to the effect of electric magnetic fields on the central nervous system. The study included various aspects of the problem of the role of natural electromagnetic fields in the evolutionary processes and their effect on animals and man, the participation of electromagnetic fields in the activity of the central nervous system, the perception of electromagnetic fields by animate organisms, the effect of these fields on the behavior of animals and man and also the modern concepts of the neurophysiological mechanisms of the effect of electromagnetic fields. New experimental data are presented indicating the possibility of selective sensitivity of the limbic structures to the effect of electromagnetic waves. A study was made of the effect of electromagnetic fields on purposeful behavioral reactions of different biological quality from the point of view of the concept of the functional system of Academician P. K. Anokhin. Some

1/2

APPROVED FOR RELEASE: 08/09/2001 CIA-RDP86-00513R002200210006-8"

"APPROVED FOR RELEASE: 08/09/2001 CIA-RDP86-00513R002200210006-8

USSR

SUDAKOV, K. V. and ANTIMONIY, G. D., Uspekhi Fiziologicheskikh Nauk, Vol 4, No 2, Apr/May/Jun 73, pp 101-135

recordings are presented showing the variations in electrical activity of the cortex and subcortical formations in various stages of the effect of electromagnetic fields.

The hypothesis is stated according to which an electromagnetic field, which has a selective effect on the limbic structure of the brain, primarily disturbs the mechanisms of the formation of negative emotional states. The analogous effect of an electric current on negative emotional reactions was observed in experiments with electronarcosis by Yu. B. Abramov [Kliniko-fiziologicheskiye issledovaniya po problemam elektrosna i elektroanestezii (elektronarkoza), Moscow, Meditsina, 3-5, 1969]. The selective effect of the electromagnetic fields on the emotional reactions of a negative nature is apparently a cause of disturbance of the afferent synthesis apparatus and the acceptor of the results of the effect. The defensive functional system was disturbed in experiments involving two reactions of different biological quality. The systems approach to the study of the given problem is considered highly prospective.

2/2

APPROVED FOR RELEASE: 08/09/2001 CIA-RDP86-00513R002200210006-8"

"APPROVED FOR RELEASE: 08/09/2001 CIA-RDP86-00513R002200210006-8

USSR

UDC 546.719-386:542.61

BOL'SHAKOV, K. A., Corresponding Member Academy of Sciences USSR; SINITSYN, N. M., TRAVKIN, V. F., and ANTIKONOVA, L. N., Moscow Institute of Fine Chemical Technology imeni M. V. Lomonosov, Moscow

"A Study of the Interaction of Hexanalorhenates (IV) with tri-n-Butylphosphine Oxide in Extraction Processes"

Moscow, Doklady Akademii Nauk SSSR, Vol 198, No 3, 1971, pp 614-617

Abstract: The extraction with Bu_3PO in CCl_4 of $/ReCl_6/^{=}$ and $/ReBr_6/^{=}$ from 0.002 M solutions of $(NH_4)_2/ReCl_6/$ and $(NH_4)_2/ReBr_6/$ in HCl was studied at equal volumes of the aqueous and organic phase. The maximum degree of extraction was at an HCl concentration of 3-4 M. With increasing concentrations of Bu_3PO in CCl_4 from 0.01 to 0.05 M, the coefficient D_{Re} of the distribution of Re between the organic and aqueous phase at 1 M HCl increased from 1.5 to 150. This indicated that more than 99% of the Re could be extracted in one operation. D_{Re} was higher for the Br than Cl complex. In the extraction of the Cl complex, the composition of the compound extracted was $(Bu_3PO)_2(H_3O)_2/ReCl_6/$ (II) were synthesized. I and II, a light-green and yellow-brown compound, respectively, dissolved easily in polar organic solvents (alcohols,

1/2

APPROVED FOR RELEASE: 08/09/2001 CIA-RDP86-00513R002200210006-8"

"APPROVED FOR RELEASE: 08/09/2001 CIA-RDP86-00513R002200210006-8

USSR

BOL'SHAKOV, K. A., et al, Doklady Akademii Nauk SSSR, Vol 195, No 3, 1971, pp 614-617

acetone, $HCCl_3$) and less readily in non-polar solvents (benzene, hexane, CCl_4). These compounds were stable in the air up to 230-40°. The molar electric conductivity of I and II in solutions of various concentrations in MeOH, EtOH, and BuOH was determined. It increased in the order BuOH < EtOH < MeOH, but there was no complete dissociation into three solvated ions even in MeOH. Solutions of I in benzene did not conduct. The electronic spectra of I and II corresponded to those of the organic phases obtained on extraction of the ammonium hexahalorhenates with Bu_3PO + $HCCl_3$. In the IR spectra of I and II, the absorption band of valency oscillations of P=O was displaced towards longer wavelengths vs. that for Bu_3PO because of a redistribution of electron density associated with the formation of the coordination compounds. The results obtained and data from the literatue indicated that the following equilibrium is established during the extraction: $3\ Bu_3PO_{org} + (NH_4)_2/ReHal_6/_{aq} + 2HCl_{aq} + (x+2)H_2O \leftrightarrows \{(Bu_3PO)_3 \cdot (H_3O)_2(H_2O)_x \cdot /ReHal_6/\}_{org} + 2NH_4Cl$.

2/2

APPROVED FOR RELEASE: 08/09/2001 CIA-RDP86-00513R002200210006-8"

"APPROVED FOR RELEASE: 08/09/2001 CIA-RDP86-00513R002200210006-8

USSR UDC 621.373.826:621.317

BARUMENKO, V. H., ANTIPENKO, A. P.

"Heterodyne Optical Spectral Analyzer"

V sb. Ispol'z. optich. kvant. generatorov v sovrem. tekhn. i med. Ch. 2-3 (Utilization of Lasers in Modern Engineering and Medicine. Parts 2-3--collection of works), Leningrad, 1971, pp 8-11 (from RZh-Radiotekhnika, No 1, 1972, Abstract No 1B627)

Translation: In order to build a heterodyne optical spectral analyzer it was necessary to solve the following problems: 1) obtain single-frequency generation of a heterodyne laser; 2) tune the single-frequency laser in the band of the investigated spectrum; 3) shift the heterodyne frequency by the amount for which the spectra of the signal and mirror channels do not overlap. The experiment confirms the possibility of using a heterodyne spectral analyzer to study the spectrum of an He-Ne laser on a 0.6328 micron wavelength. A single-frequency He-Ne laser with mode selection by means of the Michelson interferometer was used as the heterodyne. The heterodyne frequency varied linearly on supplying a sawtooth voltage from the scanning generator to the piezoelement of the selector; the frequency shift of the signal and the heterodyne was carried out by tuning one of the lasers by a magnetic field. There is one illustration and a 3-entry bibliography.

1/1

APPROVED FOR RELEASE: 08/09/2001 CIA-RDP86-00513R002200210006-8"

"APPROVED FOR RELEASE: 08/09/2001 CIA-RDP86-00513R002200210006-8

USSR UDC 621.396.62.029.7

BAKUMENKO, V. M., ANTIPENKO, A. P.

"Single-Band Optical Mixer"

Moscow, Radiotekhnika i elektronika, Vol XVII, No 2, 1972, pp 340-344

Abstract: A study was made of a scheme for a single-band optical mixer. An experiment was performed to determine the degree of suppression of the image frequency in which a laser operating in the two-frequency mode was used as the signal source, and the heterodyne was a single-frequency tunable laser. The suppression of the image frequency obtained was about 10 decibels. The possibility of using a single-band mixer in the optical range was confirmed. The degree of suppression of the image frequency can be improved by using a heterodyne with high monochromaticity. The mixer can be used in an optical heterodyne spectroanalyzer and also in superheterodyne receivers where suppression of the image frequency is desirable.

1/1

APPROVED FOR RELEASE: 08/09/2001 CIA-RDP86-00513R002200210006-8"

"APPROVED FOR RELEASE: 08/09/2001 CIA-RDP86-00513R002200210006-8

USSR

YERMOLAYEV, V. L.; ANTIPENKO, B. M.

"The Role of a Solvent in Radiationless Transfer of Energy between Rare Earth Ions"

Leningrad, Optika i Spektroskopiya; January, 1971; pp 75-80

ABSTRACT: The constants of the rate of radiationless transfer of energy (k_t) from Tb^{3+} ions (donor) to Nd^{3+}, Ho^{3+}, and Eu^{3+} ions (acceptors) in 22 different solvents were determined. It was shown that the changes k_t (approximately two orders of magnitude) are not caused by variations in the viscosity of the solvent but are connected with the chemical properties of its molecules. The following factors contribute to the radiationless transfer of energy: (1) a low donor number and (2) a low dielectric constant of the solvent. The role of the steric factor, not taken into account in the donor number, is not important. A comparison of the dependence of k_t on the concentration of added acetate anions in water and ethyl alcohol was made.

1/1

APPROVED FOR RELEASE: 08/09/2001 CIA-RDP86-00513R002200210006-8"

"APPROVED FOR RELEASE: 08/09/2001 CIA-RDP86-00513R002200210006-8

USSR UDC 535.373.2

ANTIPENKO, B. M. and YERMOLAYEV, V. L.

"Effect of Anion Concentration Variation on Radiationless Energy Transfer Between Rare Earth Ions in Liquid Solutions"

Leningrad, Optika i Spektroskopiya, Vol 29, No 1, 1970, pp 90-92

Abstract: This is the second installment of a series begun by an article in this journal (28, p 931, 1970) in which the authors shows that an increase in the anion concentration of several salts Cl^-, SO^{2-}, NO_3^-, and SCN^-) in a water solution of 293° K leads to a marked growth in the velocity constant of the radiationless energy transfer between the various rare earth ions. In the present paper, the authors find that there is still greater increase in the velocity constant between the rare earth ions with salts of aliphatic carboxylic acids (acetic, formic, and carbonic) present. Their method was to measure the quenching and the shortening of the attenuation time of the luminescence energy donor TB^{3+} as functions of the ion concentration of the acceptor Nd^{3+}, Eu^{3+}, and Ho^{3+} in the presence of various concentrations of potassium salts of carbonic acid. The luminescence intensity of Tb^{3+} and Eu^{3+} was measured on the MPF-2 spectrofluometer of the Japanese Hitachi firm, and the attenuation

APPROVED FOR RELEASE: 08/09/2001 CIA-RDP86-00513R002200210006-8"

"APPROVED FOR RELEASE: 08/09/2001 CIA-RDP86-00513R002200210006-8

USSR

ANTIPENKO, B. M., et al., Optika i Spektroskopiya, Vol 29, No 1, 1970, pp 90-92

time was measured with a device consisting of the pulse lamp ISSh-100 and the S1-4 oscillograph. They conclude with the comment that the dependence of the velocity constant on the anion concentration, which they discovered, can be used as a simple and sensitive method for studying the formation of complex rare earth ions in solution.

2/2

APPROVED FOR RELEASE: 08/09/2001 CIA-RDP86-00513R002200210006-8"

"APPROVED FOR RELEASE: 08/09/2001 CIA-RDP86-00513R002200210006-8

ANTIPENKO, D.B.

STUDY OF CHOLESTEROL METABOLISM IN DOGS EXPOSED TO THREE-YEAR CHRONIC GAMMA IRRADIATION

/Article by D. B. Antipenko and A. A. Akunov; Moscow, Aktual'nyye Voprosy Kosmicheskoy Biologii i Meditsiny (Current Problems in Space Biology and Medicine), Moscow, 1971, pp 12-14/

The literature contains information on the influence of chronic radiation on lipid metabolism. For example, with the irradiation of rats for a period of 14 months in a dose of 0.0[illegible] R/day there were substantial changes in lipid metabolism (Ye. V. Danetskaya, et al., 1961). Investigations of human subjects working with sources of ionizing radiation over a period of several years revealed that the blood cholesterol content in eight out of 37 cases was increased to 250 mg% (I. D. Kolomina, 1963; V. [illegible], A. Solyakov, et al. (1969), in a study of 135 persons working for a period of seven years with sources of ionizing radiation (the annual irradiation dose was 100-800 mrad), noted changes in some indices of lipid metabolism.

It should be noted that information on the effect of chronic irradiation on cholesterol metabolism in the human and animal body is extremely limited and contradictory.

The purpose of this investigation was a determination of the effect of chronic irradiation over a period of three years on the cholesterol content in the serum of dogs.

The materials in this study constitute part of complex investigations for study of the biological effects in dogs subjected to irradiation simulating the probable radiation effect during prolonged space flights (Yu. G. Grigor'yev, et al., 1968).

APPROVED FOR RELEASE: 08/09/2001 CIA-RDP86-00513R002200210006-8"

"APPROVED FOR RELEASE: 08/09/2001 CIA-RDP86-00513R002200210006-8

ANTIPENKO, E. S.

SOV/DMS 53403
12 Jan 71

UDC: 378.245:61

[illegible] OF TRAINING [illegible] IN MEDICAL SCIENCES

[illegible] (Editor)

[illegible] by E.S. Antipenko, [illegible]; Moscow, Sovetskoye Zdravookhraneniye, [illegible], [illegible], [illegible] 15 [illegible] 1970, pp 24-29]

Scientific personnel are the ones mainly involved in organization of scientific research work and in improving its productivity. The high level of their training, the firm scientific technological basis of research institutes, sufficient financing, complete and prompt supply of information -- all this constitutes the foundation on which scientific achievements are built.

In this connection, of special importance is the training of scientific workers, and first of all of the most qualified ones, namely doctors of medical sciences. While the existing form, the sole one being graduate study in the clinics, on correspondence basis, special purposes, have already been [illegible] long and [illegible] the training of [illegible] of medicine, [illegible] there are no [illegible] to [illegible] broad form of selection [illegible] system of training doctors of medical sciences.

[illegible] the training of scientists, [illegible] consideration in selecting [illegible] there is very little [illegible] knowledge of [illegible] scientific [illegible]

[illegible] the correlation between duration [illegible] the age at which the research [illegible] the city, and the clinics. [illegible] The [illegible] [illegible] scientific [illegible] [illegible] political, [illegible]

APPROVED FOR RELEASE: 08/09/2001 CIA-RDP86-00513R002200210006-8"

"APPROVED FOR RELEASE: 08/09/2001 CIA-RDP86-00513R002200210006-8

Foundry

USSR UDC 669.187.25

KOCHO, V. S., IVANCHENKO, Yu. I., KOROBKO, I. M., SHEMKOVTSOV, O. A., MALIKOV, G. P., and ANTIPENKO, G. I., Kiev Polytechnical Institute; Zaporozhye Electro-Metallurgical Works (Dneprospetsstal')

"Determination of the Instant of the End of the Power Melting Period in a Steel-Melting Arc Furnace"

Moscow, Izvestiya Vysshikh Uchebnykh Zavedeniy -- Chernaya Metallurgiya, No 11, 1970, pp 70-72

Abstract: The possibility of determining the instant at which the steel melting period ends is discussed. A computation method is presented which is based on solution of a derived function from experimental data on melting ball-bearing steel in an arc furnace of the Dneprospetsstal' plant. A schematic of the computer is included.

1/1

APPROVED FOR RELEASE: 08/09/2001 CIA-RDP86-00513R002200210006-8"

"APPROVED FOR RELEASE: 08/09/2001 CIA-RDP86-00513R002200210006-8

AA0052654 ANTIPENKO, I. A. UR 0482

Soviet Inventions Illustrated, Section III Mechanical and General, Derwent, /- 70

241851 SHAFT AND SEAL is reliable and provides a tight seal. It consists of a fixed chromium silicon steel ring 1, encased (3) rotation carbon ring 2 and an elastic gland 4 held on the shaft 5 by a sleeve 6. Crimped spring 7 fitted on the sleeve pushes the rotating clamp 8 and gland 4. The gland section represents a ring, neck 9, radiused portion 10 which projects by 0.3 mm in front of the ring face and a cylindrical part 11. During the assembly, the air is forced out of the space 12 and the gland is sucked towards the ring 2.

9.6.67. as 1163033/25-27, CHUGAEV, N.G. et al. (2.9.69) Bul. 14/18.4.69. Class 47c, Int. Cl. F 06d.

1/2 11

19821392

APPROVED FOR RELEASE: 08/09/2001 CIA-RDP86-00513R002200210006-8"

"APPROVED FOR RELEASE: 08/09/2001 CIA-RDP86-00513R002200210006-8

AA0052654

Klimov, L. Ya.; Obukhov, N. Ya.; Lavrov, M. T.; Antipenko, I. N.; Severtsev, S. A.

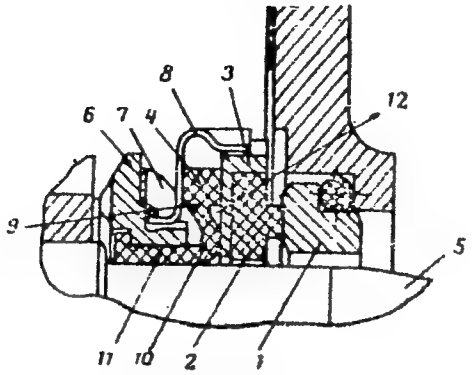

2/2

19821393

APPROVED FOR RELEASE: 08/09/2001 CIA-RDP86-00513R002200210006-8"

"APPROVED FOR RELEASE: 08/09/2001 CIA-RDP86-00513R002200210006-8

Molecular Physics

USSR UDC 535.373.2

ANTIPENKO, K. M., DMITRYUK, A. V., ZUBKOVA, V. S., KARAPETYAN, G. O., and MAK, A. A., Institute of Precision Mechanics and Optics

"Cooperative Processes in Activated Glasses"

Moscow, Izvestiya Akademii Nauk SSSR, Seriya Fizicheskaya, Vol 37, No 3, 1973, pp 466-469

Abstract: Cooperative phenomena were found and studied in glasses activated with Yb--Tb, Yb-Eu. It is shown that there are at least two mechanisms for anti-Stokes excitation of the Tb^{3+} and Eu^{3+} ions: fast (cooperative sensitized luminescence) and slow (combinational excitation). Some quantitative parameters of the cooperative processes were determined. A study was made of the functional dependence of the efficiency of the cooperative processes on excitation power and energy, glass structure and composition, temperature, and activator concentration ratio. It is shown that disorder of the structure of the glasses does not prevent the occurrence in them of cumulative processes such as cooperative sensitization and combinational excitation, the efficiency of the cumulative processes in the glasses being commensurable with the efficiency of two-photon absorption with the participation of the virtual level.

1/1

APPROVED FOR RELEASE: 08/09/2001 CIA-RDP86-00513R002200210006-8"

"APPROVED FOR RELEASE: 08/09/2001 CIA-RDP86-00513R002200210006-8

1/2 016 UNCLASSIFIED PROCESSING DATE--23OCT70

TITLE--SPECTROGRAPHIC ANALYSIS OF SLAG MELTS ON THE DFS10 QUANTOMETER USING VARIOUS LIGHT SOURCES -U-

AUTHOR-(03)-NIKITINA, O.I., ANTIPENKO, L.L., KOLOMIYETS, L.P.

COUNTRY OF INFO--USSR

SOURCE--ZAVOD. LAB. 1970, 36(2), 175-6

DATE PUBLISHED-------70

SUBJECT AREAS--MATERIALS, CHEMISTRY

TOPIC TAGS--SLAG, CHEMICAL ANALYSIS, SPECTROGRAPHIC ANALYSIS, ELECTRIC GENERATOR/(U)IG3 VOLTAGE GENERATOR, (U)DFS10 QUANTOMETER

CONTROL MARKING--NO RESTRICTIONS

DOCUMENT CLASS--UNCLASSIFIED

PROXY REEL/FRAME--1996/1841 STEP NO--UR/0032/70/036/002/0175/0176

CIRC ACCESSION NO--AP0118805

UNCLASSIFIED

APPROVED FOR RELEASE: 08/09/2001 CIA-RDP86-00513R002200210006-8"

"APPROVED FOR RELEASE: 08/09/2001 CIA-RDP86-00513R002200210006-8

2/2 016 UNCLASSIFIED PROCESSING DATE--23OCT70

CIRC ACCESSION NO--AP0118805

ABSTRACT/EXTRACT--(U) GP-0- ABSTRACT. A LOW VOLTAGE SPARK (40 MUF, 500 MUH) WAS USED IN THE ANAL. OF SLAG MELTS AND THE RESULTS WERE COMPARED WITH THOSE OBTAINED BY A HIGH VOLTAGE GENERATOR IG-3 (0.01 MUF, 0.55 MUH). THE AT. LINES SI I 288.1, AL I 396.1, MG I 518.3, FE I 440.4 NM GAVE BETTER REPRODUCIBILITY BY USING THE ARC, WHILE CA II 325.8 AND 370.6, MN II 293.3 AND 482.3, MG II 280.2 WAS BETTER WITH THE LOW VOLTAGE SPARK. THE RESULTS CONFIRMED THE FEASIBILITY OF USING A LOW VOLTAGE SPARK FOR SLAG ANAL.

UNCLASSIFIED

APPROVED FOR RELEASE: 08/09/2001 CIA-RDP86-00513R002200210006-8"

"APPROVED FOR RELEASE: 08/09/2001 CIA-RDP86-00513R002200210006-8

Molecular Physics

USSR

ANTIPIN, A. A., KURKIN, I. N., SHLENKIN, V. I., Kazan' State University imeni V. I. Ul'yanov-Lenin

"Spin-Lattice Relaxation of Sm^{3+} and Ho^{3+} Ions in Single Crystals of Scheelite Structure"

Leningrad, Fizika Tverdogo Tela, Vol 13, No 9, Sept, 71, pp 2641-2645

Abstract: The authors study of the variation with temperature of the spin-lattice relaxation time for Sm^{3+} ions in $CaWO_4$ single crystals and for HO^{3+} ions in single crystals of $CaWO_4$ and $PbMoO_4$. Measurement of relaxation times in the $CaWO_4:Sm^{3+}$ system were made on a frequency of $\sim$8.8 GHz by the method of saturation of the spin echo signal, on a frequency of $\sim$2.9 GHz by the method of pulse saturation, and from broadening of the EPR signal. The relaxation times for Ho^{3+} in calcium tungstate and lead molybdate were found from the variation with temperature of the width of the EPR lines on a frequency of approximately 36.0 GHz.

It was found that direct, Raman, and Obrakhovskiy processes make an appreciable contribution to the probability of spin-lattice relaxation for $CaWO_4:Sm^{3+}$ at temperatures of 1.5-10°K. It was found from the probability of the Obrakhovskiy process that the first excited Stark level of the term $^6H_{5/2}$ is located above the ground state by a distance of 61.5 cm^{-1},

1/2

APPROVED FOR RELEASE: 08/09/2001 CIA-RDP86-00513R002200210006-8"

"APPROVED FOR RELEASE: 08/09/2001 CIA-RDP86-00513R002200210006-8

USSR

ANTIPIN, A. A. et al., Fizika Tverdogo Tela, Vol 11, No 9, pp 2641-2645

which agrees satisfactorily with the calculation of the Stark structure for this term. Theoretical valuations are also given for the relaxation times for the calcium tungstate-samarium ion system using the Jeffries method.

Spin-lattice interaction of Ho^{3+} ions in calcium tungstate and lead molybdate crystals in the 10-20°K temperature range is determined by the Obrakhovskiy relaxation mechanism.

The authors thank A. M. Morozov for furnishing the single crystals for the research, R. Yu. Abdulsabirov for assistance in carrying out the experiment, and E. Kh. Ivoylova and O. I. Mar'yakhina for assistance in making the calculations. Two figures, bibliography of twenty-two titles.

2/2

APPROVED FOR RELEASE: 08/09/2001 CIA-RDP86-00513R002200210006-8"

"APPROVED FOR RELEASE: 08/09/2001 CIA-RDP86-00513R002200210006-8

Acc. Nr. AP0049131 — Abstracting Service: CHEMICAL ABST. 5-70 — Ref. Code: UR 0079

100845j Reaction of germanium and tin tetrachlorides with aluminumalkyl compounds. Antipin, L. M.; Stepina, E. M.; Mironov, V. F. (USSR). *Zh. Obshch. Khim.* 1970, 40(1), 115-18 (Russ). The subject reactions were run in argon atm. $GeCl_4$ (18.5 g) and 10.9 g $EtAlCl_2$ in 5 hr at 100-5° gave 66.5% $GeCl_4$, 85% Et_3GeCl, and 1.1% Et_2GeCl_2, with some $EtGeCl_3$. Adding 59.8 g $GeCl_4$ to 35.4 g $EtAlCl_2$ and heating 4.5 hr at 90-100° gave 11% $GeCl_4$, 85.6% Et_3GeCl, 1.8% Et_2GeCl_2, and some $EtGeCl_3$. Similarly, 12.2 g ethylaluminum sesquichloride and 20.6 g $GeCl_4$ gave 41.2% $GeCl_4$, 84% Et_3GeCl, 5.4% Et_2GeCl_2 and some $EtGeCl_3$; from equimolar amts. Et_3Al and $GeCl_4$ were obtained 80.2% Et_3GeCl and traces of the other chlorides. Et_2AlCl and $GeCl_4$ gave 31.6% $GeCl_4$, 85.6% Et_3GeCl, and traces of other chlorides. Heating $GeCl_4$ and Et_4Ge 18 hr, at 200° gave 80% Et_2GeCl_2. Treating 10.1 g Et_3Al with 23.2 g $SnCl_4$ gave 86% Et_3SnCl and 5.9% Et_2SnCl_2. Adding 18.9 g $SnCl_4$ to 8.25 g Et_3Al at 10-20°, holding 2 hr, adding 30 ml $CHCl_3$, heating 4.5 hr at 40-50°, then holding 12 hr gave 6.2 g solid, decompd. 230°, $(Et_2SnO)_2.SnCl_4$ and Pr_3Al similarly gave 72.2% Pr_3SnCl and 8.1% $Pr_2SnCl_2.SnCl_4$ and iso-Bu_3Al similarly treated gave 74.5% iso-Bu_3SnCl and 17.6% iso-Bu_4Sn. $SnCl_4$ and Et_3AlCl gave 40.7% Et_2SnCl_2, m. 82°. Since alkylation of $GeCl_4$ by Al compds. stops at Et_3GeCl if the Al compd. is used in deficient amounts, the formation of the other chlorogermanes must be attributed to disproportionation reactions. G. M. Kosolapoff

1/1

REEL/FRAME
19800937

APPROVED FOR RELEASE: 08/09/2001 CIA-RDP86-00513R002200210006-8"

"APPROVED FOR RELEASE: 08/09/2001 CIA-RDP86-00513R002200210006-8

1/2 009 UNCLASSIFIED PROCESSING DATE--15NOV70

TITLE--SELECTIVE REDUCTION OF ORGANOCHLOROSILANES -U-

AUTHOR-(03)-ANTIPIN, L.M., BLEKH, L.M., MIKONOV, V.F.

COUNTRY OF INFO--USSR

SOURCE--ZH. OBSHCH. K[illegible] 1970, 40(4), 812-14

DATE PUBLISHED--------70

SUBJECT AREAS--CHEMISTRY

TOPIC TAGS--ORGANO SILICON COMPOUND, ORGANIC SILANE, CHLORINATED ORGANIC COMPOUND, CHEMICAL REDUCTION

CONTROL MARKING--NO RESTRICTIONS

DOCUMENT CLASS--UNCLASSIFIED

PROXY REEL/FRAME--3002/1101 STEP NO--UR/0079/70/040/004/0812/0814

CIRC ACCESSION NO--AP0123528

UNCLASSIFIED

APPROVED FOR RELEASE: 08/09/2001 CIA-RDP86-00513R002200210006-8"

"APPROVED FOR RELEASE: 08/09/2001 CIA-RDP86-00513R002200210006-8

2/2 009 UNCLASSIFIED PROCESSING DATE--13NOV70

CIRC ACCESSION NO--AP0128528

ABSTRACT/EXTRACT--(U) GP-0- ABSTRACT. THROUGHOUT REACTIONS WERE RUN IN DRY ARGON ATM. MIXING 0.27 MOLE ET SUB2 SICL SUB2 WITH 0.068 MOLE ALCL SUB3 AND 0.075 MOLE NAH GRADUALLY AT REFLUX GAVE 69.3PERCENT ET SUB2 SIHCL; WITH 0.067, 0.067 AND 0.085 MOLE OF REACTANTS, THE YIELD WAS 32.3PERCENT. SIMILARLY WERE PREPD. 31.9PERCENT MEPRSIHCL, 11-17PERCENT ME SUB2 SIHCL, AND 1.5PERCENT ETSIHCL SUB2. SINCE THE REACTION IS VIGOROUS, IT MUST BE CONTROLLED BY USING EXCESS REAGENT SILANE OR A DILUENT SUCH AS VASELINE OIL. NO R SUB2 SIH SUB2 WERE FOUND. MEPHSICL SUB2 IN THIS REACTION UNDERWENT RAPID DISPROPORTIONATION AND GAVE ME SUB2 SICL SUB2 AND PH SUB2 SICL SUB2, WHICH THEN UNDERWENT PARTIAL REDN. IF NAH IS REPLACED BY NACL THE DISPROPORTIONATION IS INHIBITED, BUT EVEN IN THIS CASE PHSICL SUB3 GAVE 4-7PERCENT PH SUB2 SICL SUB2 AND 0.8PERCENT PH SUB3 SICL. ATTEMPTED REDN. OF R SUB3 SICL GAVE R SUB2 SIH SUB2, R SUB2 SIHCL, R SUB3 SIH, AND - SUB3 SICL RESIDUE.

APPROVED FOR RELEASE: 08/09/2001 CIA-RDP86-00513R002200210006-8"

"APPROVED FOR RELEASE: 08/09/2001 CIA-RDP86-00513R002200210006-8

Acc. Nr. AP0045144 Abstracting Service: CHEMICAL ABST. 4/70 Ref. Code UR0409

90589n Reaction of digermazanes with o-carboranes. Svitsyn, R. A.; Zhigach, A. F.; Sobolev, E. S.; Antipin, L. M.; Mironov, V. F. (Gos. Nauch.-Issled. Inst., Khim. Tekhnol. Elementoorg. Soedin., Moscow, USSR). *Khim. Geterotsikl. Soedin.* 1970, (1), 127–8 (Russ). Heating 4.32 g *o*-carborane with 10.1 g $(Et_3Ge)_2NH$ 14 hr at 200–300°, then with 1 g added $(Et_3Ge)_2NH$ 12 hr at 300°, gave after treatment with MeOH 50% 1-triethylgermyl-*o*-carborane, d^{20} 1.0940, n_D^{20} 1.5483. Similarly, 1-isopropylcarborane gave in 17 hr at 245° with $(Et_3Ge)_2NH$ 27% 1-isopropyl-2-triethylgermylcarborane, n_D^{20} 1.5506. 1-Phenylcarborane in 28 hr at 275° similarly gave 22.5% 1-phenyl-2-triethylgermylcarborane, n_D^{20} 1.5882. G. M. Kosolapoff

1/1

REEL/FRAME
19780044

APPROVED FOR RELEASE: 08/09/2001 CIA-RDP86-00513R002200210006-8"

"APPROVED FOR RELEASE: 08/09/2001 CIA-RDP86-00513R002200210006-8

USSR

UDC 621.726.2

VOLYNSKIY, V. V., ANTIPIN, L. N., MANSKIY, Ye. G., DROZDENKO, V. A., and CHUB, V. Ya.

"An Investigation of the Cathode Process In Obtaining Titanium Powders of Increased Purity"

Moscow, Metallurgiya i Khimiya Titana (Institut Titana), Metallurgiya Publishing House, Vol 6, 1970, pp 81-85

Translation: The effect of the concentration of lower titanium compounds, cathode density of the current, and the material of the sub-layer on the course of the cathode process when obtaining titanium powders with a high degree of purity by the electrolyte method is studied. The mechanism of the electrode reaction with different content of trivalent titanium in the electrolyte is considered. The greatest effect on the purity of the titanium powder obtained is exerted by the concentration of $TiCl_3$ in the electrolyte. Technological conditions of electrolysis are selected which make it possible to obtain powder of the assigned granulometric composition with a 99.9% content of the primary metal. Four illustrations, one table, and ten bibliographic entries.

1/1

APPROVED FOR RELEASE: 08/09/2001 CIA-RDP86-00513R002200210006-8"

"APPROVED FOR RELEASE: 08/09/2001 CIA-RDP86-00513R002200210006-8

UDC 669.295.472

USSR

VOLYNSKIY, V. V., ANTIPIN, L. N., MANSKIY, Ye. G., and CHUB, V. Ya.

"The Interaction of Oxygen With the Carbon-Graphite Anode During Electrolysis of Fluorititanium Liquid Metals"

Moscow, Metallurgiya i Khimiya Titana (Institut Titana), Metallurgiya Publishing House, Vol 6, 1970, pp 89-93

Translation: Questions of the interaction of discharge oxygen with the carbongraphite anode during electrolysis of oxyfluorititanium liquid metals are considered. The effect of oxides on the electrochemical features of the anode is studied. A thermodynamic calculation is made which demonstrates the possibility of forming oxides of the C_yO type. Such compounds are the basic reason for the slow drop in inverse electromotive force when a polarizing current is switched off. Two illustrations and five bibliographic entries.

1/1

APPROVED FOR RELEASE: 08/09/2001 CIA-RDP86-00513R002200210006-8"

"APPROVED FOR RELEASE: 08/09/2001 CIA-RDP86-00513R002200210006-8

UDC 669.71.472

USSR

ANTIPIN, L. N., VOLYNSKIY, V. V., MANSKIY, Ye. G., CHUB, V. Ya., and KLIMENYUK, V. A.

"The Anode Effect During Electrolysis of Oxyfljorotitanium Fusions"

Moscow, Metallurgiya i Khimiya Titana (Institut Titana), Metallurgiya Publishing House, Vol VI, 1970, pp 77-81

Translation: The reasons for the appearance of the anode effect during electrolysis of oxyfluorotitanium fusions on a carbon-graphite anode are investigated. It is demonstrated that the anode effect arises as a result of the formation of non-conducting oxides of the COF_2 type on the surface. The formation of such compounds is accompanied by a worsening in wettability and leads to passivation of the anode. Study of the critical density of current in the oxyfluorotitanium fusion was done on an automatic device for recording volt-ampere dependencies. It was demonstrated that the concentration of TiO_2 in the electrolyte exerts the primary influence on the size of critical current density. Experimental results are given which show the influence of TiO_2 concentration on the value of critical current density. Four illustrations and 14 bibliographic entries.

1/1

APPROVED FOR RELEASE: 08/09/2001 CIA-RDP86-00513R002200210006-8"

"APPROVED FOR RELEASE: 08/09/2001 CIA-RDP86-00513R002200210006-8

USSR UDC 669.295.054.79

ANTIPIN, L. N., DROZDENKO, V. A., KOYGUSHSKIY, N. N., OLESOV, Yu. G., USTINOV, V. S., ZAPADNYA, V. I., VOLYNSKIY, V. V., and KALUZHSKAYA, E. L.

"The Technology for Obtaining Powders by the Electrolysis Method for Liquid Metals With a Soluble Anode"

Moscow, Metallurgiya i Khimiya Titana (Institut Titana), Metallurgiya Publishing House, Vol 6, 1970, pp 85-89

Translation: A technological chart for producing powders of titanium and its alloys by the electrolysis method with a soluble anode is worked out. Opitmal technological conditions for obtaining powders by electrolysis are selected. The chart has been adopted for introduction. The titanium powders obtained do not differ, in impurity content, from the best grades of titanium sponge. The effect of electrolyte temperature on the qualities of the metal obtained and the chlorine content in it are studied. The metal obtained is undergoing testing by users. Two illustrations, two tables, and two bibliographic entries.

1/1

APPROVED FOR RELEASE: 08/09/2001 CIA-RDP86-00513R002200210006-8"

"APPROVED FOR RELEASE: 08/09/2001 CIA-RDP86-00513R002200210006-8

USSR UDC 621.762.2

ANTIPIN, L. N., DROZDENKO, V. A., KOYGUSHSKIY, N. N., OLESOV, YU. G., USTINOV, V. S., ZAPADNYA, V. I., VOLYNSKIY, V. V., and KALUSHSKAYA, E. L.

"Technology of Production of Powders by Electrolysis of Melts With Soluble Anode"

Sb. tr. Vses. n.-i. i proyektn. in-t titana [Collected Works of All-Union Scientific-Research and Planning Institute for Titanium], 6, 1970, pp. 85-89, (Translated from Referativnyy Zhurnal-Metallurgiya, No. 1, 1971, Abstract No.1 G456 by the authors).

Translation: A technological plan is developed for the production of Ti and titanium alloy powders by electrolysis with a soluble anode. The optimal technological mode is selected for electrolytic powder production. The plan has been accepted for use. The Ti powders produced are equal in impurity content to the best types of Ti sponge. The influence of electrolyte temperature on properties of the Ti produced and on content of Cl is studied. The Ti produced has passed consumers' tests. 2 figures; 2 tables.

1/1

APPROVED FOR RELEASE: 08/09/2001 CIA-RDP86-00513R002200210006-8"

"APPROVED FOR RELEASE: 08/09/2001 CIA-RDP86-00513R002200210006-8

USSR

UDC 669.295.472

VOLYNSKIY, V. V. ANTIPIN, L. N., MANSKIY, Ye. G., and CHUB, B. Y.

"Interaction of Oxygen with Carbon-Graphite Anode During Electrolysis of Fluorotitanate Melts"

Sb. tr. Vses. n.-i. i proyektn. in-t titana [Collected works of All-Union Scientific-Research and Planning Institute for Titanium], 6, 1970, 89-93, (Translated from Referativnyy Zhurnal-Metallurgiya, No. 1, 1971, Abstract No.1 G194 by the authors).

Translation: Problems of the interaction of discharged O with the carbon-graphite anode during electrolysis of oxyfluorotitanate melts are studied. The influence of oxides on the electrochemical characteristics of the anode are studied. Thermodynamic calculation shows the possibility of formation of C_xO type oxides. These compounds are the primary cause of slow decreases in the reverse electromotive force when the polarizing current is turned off. 2 figures; 5 biblio; refs.

1/1

APPROVED FOR RELEASE: 08/09/2001 CIA-RDP86-00513R002200210006-8"

"APPROVED FOR RELEASE: 08/09/2001 CIA-RDP86-00513R002200210006-8

USSR UDC 669.295.472

ANTIPIN, L. N., BOLYNSKIY, V. V., MANSKIY, Ye. G., CHUB, V. Ya., and KLIMENYUK, V. A.

"Anode Effect During Electrolysis of Oxyfluorotitanate Melts"

Sb. tr. Vses. n.-i. i proyektn. in-t titana [Collected works of All-Union Scientific-Research and Planning Institute for Titanium], 6, 1970, 77-81, (Translated from Referativnyy Zhurnal-Metallurgiya, No. 1, 1971, Abstract No.1 G195 by the authors).

Translation: The causes for the formation of the anode effect during electrolysis of oxyfluorotitanate melts on a carbon-graphite anode are studied. The anode effect arises as a result of formation of non-conducting oxides such as COF_2 on the surface. The formation of these compounds is accompanied by worsening of wetability and leads to passivation of the anode. Study of the critical D in oxyfluorotitanate melts was performed on an automatic installation recording the volt-ampere functions. Primary influence on the value of critical D is that of the concentration of TiO_2 in the electrolyte. Experimental results are presented demonstrating the influence of TiO_2 concentration on critical D. 4 figures; 14 biblio. refs.

1/1

APPROVED FOR RELEASE: 08/09/2001 CIA-RDP86-00513R002200210006-8"

"APPROVED FOR RELEASE: 08/09/2001 CIA-RDP86-00513R002200210006-8

1/2 026 UNCLASSIFIED PROCESSING DATE--23UC170

TITLE--ROLE OF THE COOPERATIVE INTERACTION OF GROWING CHAINS AND MACROMOLECULAR MATRIXES DURING POLYMERIZATION -U-

AUTHOR-(05)-OSADA, YE., ANTIPINA, A.D., PAPISOV, I.M., KABANOV, V.A., KARGIN, V.A.

COUNTRY OF INFO--USSR

A

SOURCE--DOKL. AKAD. NAUK SSSR 1970, 191(2), 379-402 (PHYS CHEM)

DATE PUBLISHED-------70

SUBJECT AREAS--CHEMISTRY

TOPIC TAGS--MACROMOLECULE, METHACRYLIC ACID, POLYMERIZATION, HYDROGEN BONDING, CHEMICAL REACTION RATE, MOLECULAR INTERACTION

CONTROL MARKING--NO RESTRICTIONS

DOCUMENT CLASS--UNCLASSIFIED

PROXY REEL/FRAME--1997/1127 STEP NO--UR/0020/70/191/002/0379/0402

CIRC ACCESSION NO--AT0119981

UNCLASSIFIED

APPROVED FOR RELEASE: 08/09/2001 CIA-RDP86-00513R002200210006-8"